2FS0916/S

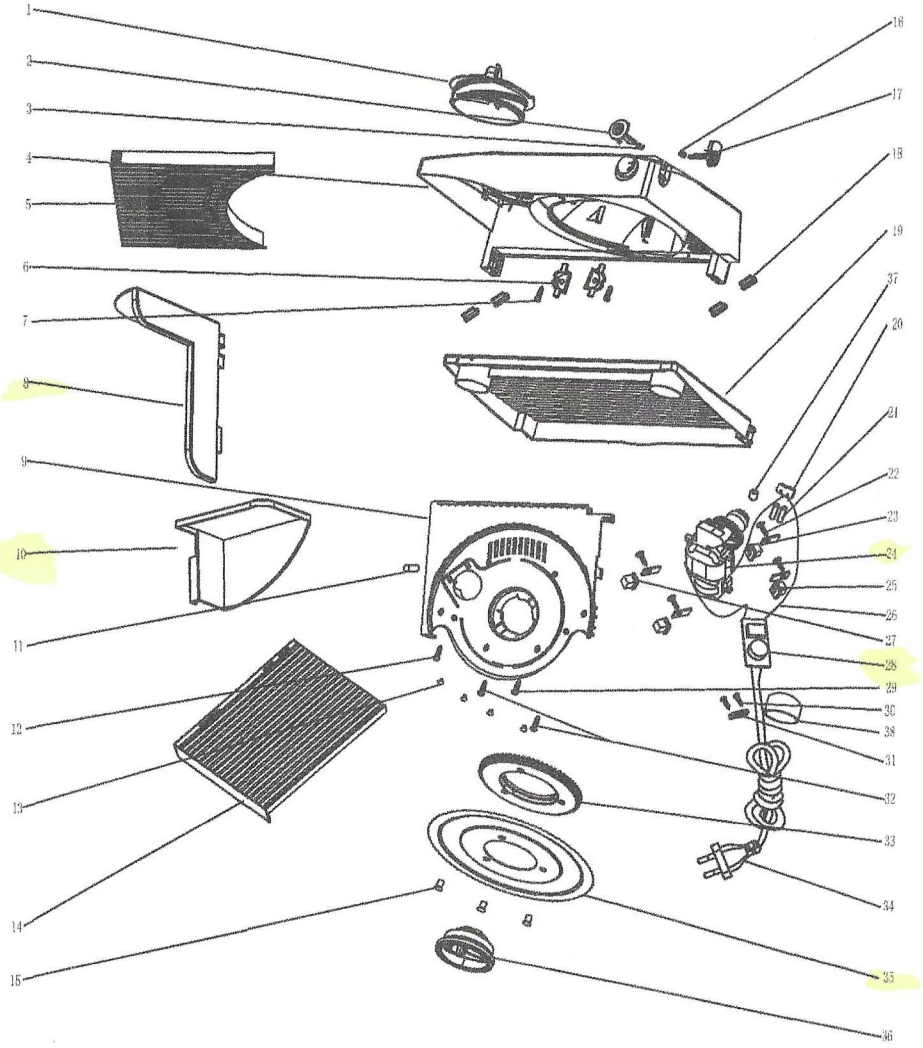

序号	图号	名称	材料或规格	用量	备注
38		Magnetic beads	Ferrite	1	
37		Gear cap			
36		Blade latch	ABS	1	
35	892.K.03	Circularity Blade	SUS420J2	1	
34		Power cord	2.5A [illegible]	1	
33		Gear	POM	1	
32		Screw	PA3.0x10	2	
31		Cord Grip B	PA66	1	
30		Screw	PA3x12	2	
29		Screw	PC3*14	1	
28		PCB	YJ201	1	
27	892.J.02	Rubber shoulder pads 2	PVC	2	
26		wire	1015/105℃ 600V 24AWG	1	
25	892.J.01	Rubber shoulder pads 1	PVC	2	
24		Motor	5525QB	1	
23	892.K.04	Impaction	Zinc plating plate	1	
22		Screw	PWA3*12	4	
21		Contract board	Φ3*10	2	
20		Jogging switch	WS-3	1	
19		Soleplate B	ABS	1	
18	896-2-03	Anti-slip pads	Rubber	2	
17		Safety rack	ABS	1	
16	896-2-01	Spring	65Mn	1	
15	892.K.02	Rivet	A1	3	
14		Soleplate A	ABS	1	
13		Protect the Gun A	POM	4	
12		Screw	PA3X14	1	
11	892.F.01	Short Shaft	SUS430	1	
10		Food pusher	ABS	1	
9		Stand	ABS	1	
8		Food tray	ABS	1	
7		Screw	PA3*10	2	
6		Trap frame	ABS	2	
5		Thickness guide	ABS	1	
4		Main body	ABS	1	
3	896-2-02	Spring	65Mn	1	
2		Jogging switch cotton	ABS	1	
1		Knob	ABS	1	

标记 Measure	数量 Number	更改单号 Design No	签名 Signature	日期 Date

设计 Designed By	
校对 Verified By	
工艺 Process	
审核 Checked By	
标准化 Standardization	
批准 Approved By	

150W

投影方式 First Angle Projection

版本 Edition	比例 Scale
A	
第 1 张 No.	共 1 张 Total