mm [inch]

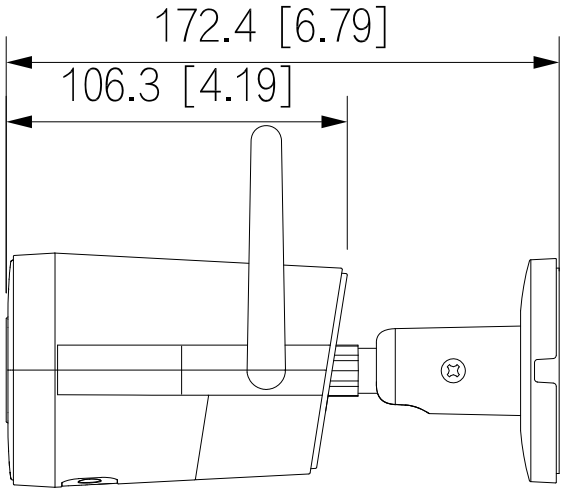
172.4 [6.79]
106.3 [4.19]

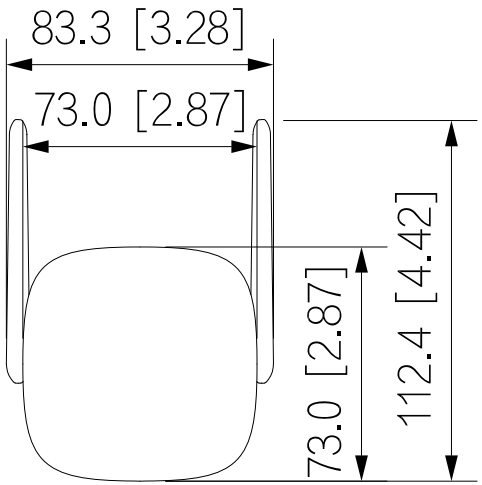
83.3 [3.28]
73.0 [2.87]
73.0 [2.87]
112.4 [4.42]

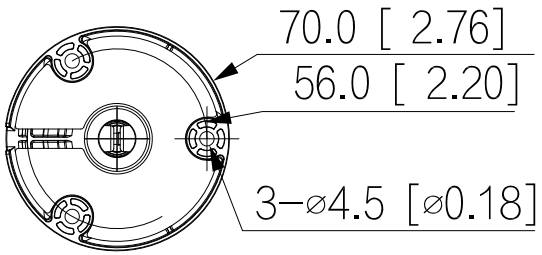
70.0 [2.76]
56.0 [2.20]
3−⌀4.5 [⌀0.18]