Booklet available in English on
Heft in deutscher Sprache erhältlich auf
Livret disponible en français sur
Libretto disponibile in Italiano su
Folleto disponible en español en
如需中文版手册，请访问

McLAREN 2022

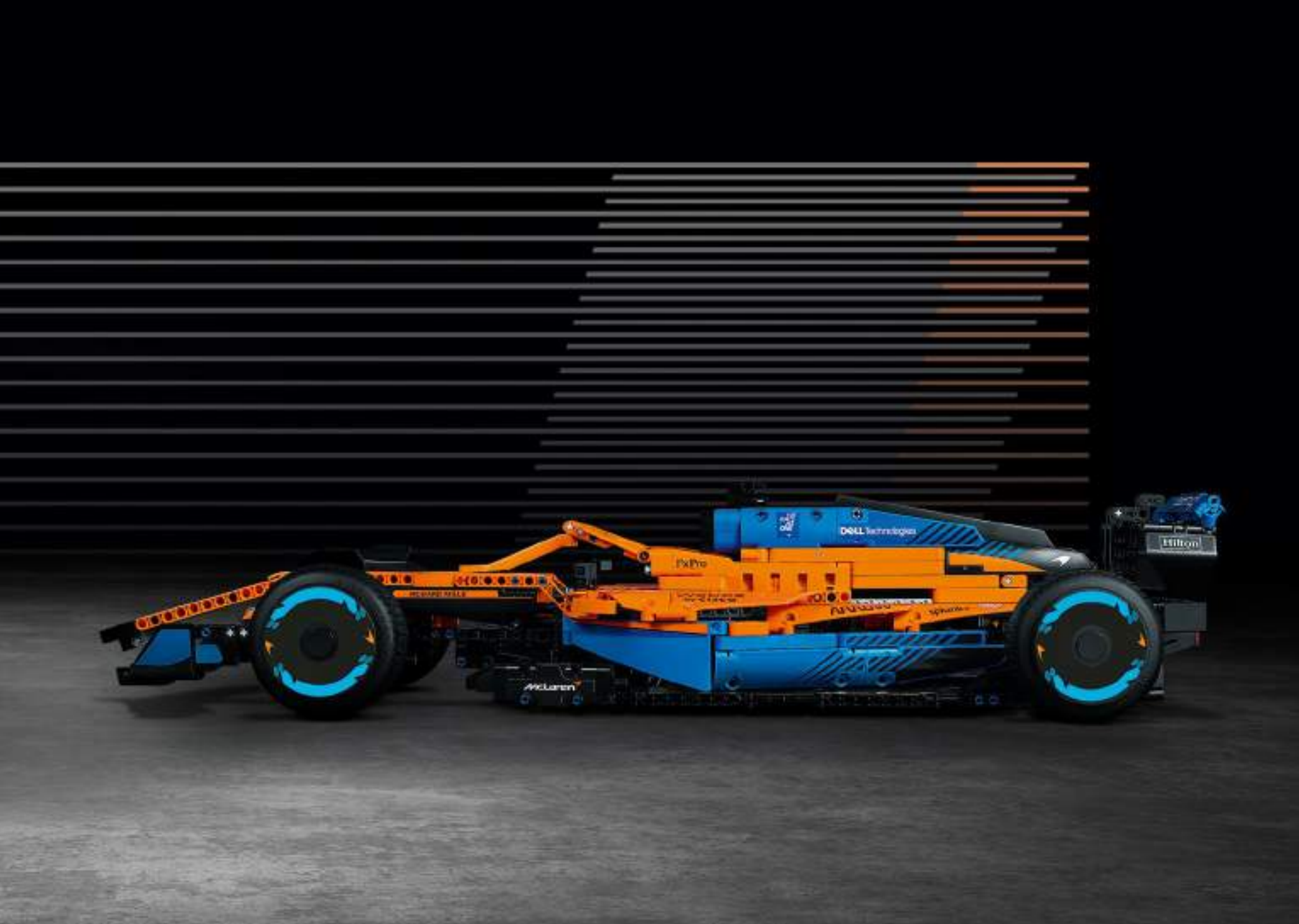
DELL Technologies
Hilton
McLaren

webex
by CISCO

Hilton
Gulf

DELL

THE PASSION FOR PERFECTION

With over 180 race victories and 20 World Championships, McLaren Racing is one of the most successful names in the history of Formula 1. During five decades of racing, the team has become famous for its iconic vehicle designs and technical innovation.

Nothing symbolises this more than the stunning McLaren F1 racing car. Developed specifically for the 2022 season, it combines a smooth "organic" form with state-of-the-art technology. It provided the perfect challenge for the LEGO® Technic design team as they tried to recreate the McLaren 2022 Formula 1 car in Technic elements.

2021 Bahrain Grand Prix

CREATING A NEW FORMULA

The new regulations for the 2022 season presented McLaren Racing's design team with the exciting challenge of developing an entirely new race car from scratch.

With a format that looks to encourage more competitive racing, the team improved the car's aerodynamic wake to allow for closer contests with more thrilling maneuvers. The new, enhanced performance also demanded the development of completely new braking and suspension systems.

"Developing a new Formula 1 car is like assembling a puzzle. We have built significant momentum over recent seasons, and it's important that we continue our upward trajectory as we enter new, uncharted territory. The team has worked hard to embrace the new formula, and we are excited to go racing in a new chapter of the sport."

Andreas Seidl, Team Principal, McLaren F1

“DEVELOPING A NEW FORMULA 1 RACING CAR IS LIKE DEVELOPING AND ASSEMBLING A PUZZLE

Andreas Seidl, Team Principal, McLaren F1

2021 French Grand Prix

LARS KROGH JENSEN
Designer
LEGO® Technic

THE PERFECT PARTNERSHIP

Frequent check-ins between the two design teams were vital to ensuring the final model captured both the look and spirit of the real 2022 McLaren Formula 1 racing car. James Key, Executive Director, Technical at McLaren F1 was pleased with the flexibility and collaboration of the Technic designers – "We began working on the next generation of racing car as soon as the blueprint is revealed. From there the process is almost continuous until the very last moment. We were delighted to have that agile working relationship with the Technic team. The final result looks fantastic."

FROM THE DESIGN TEAM

The biggest challenge LEGO® designer Lars Krogh Jensen faced while recreating the LEGO Technic version of the McLaren Formula 1 car was the fact that the real racing car was still under development. *"It was exciting following the process and seeing their car evolve, but of course, it also meant I was constantly having to make adjustments to our model."* The team started with a sketch build, which quickly revealed extra stability would be needed due to the model's 65 cm (25.5 in.) extended length. Capturing the smooth rounded lines of the car's design in rigid Technic elements was the next big test. But for Lars it was also about the features and functions: *"It wouldn't be a real Technic model without things like the working differential and steering."*

1

12
61

2

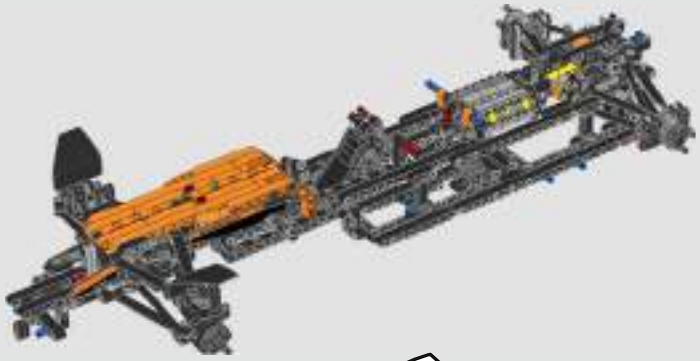

62
161

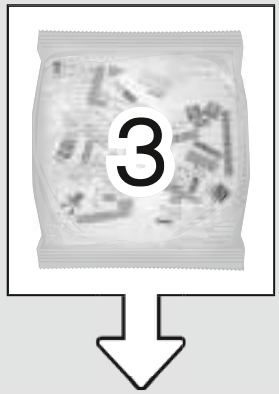
3

162 239

4

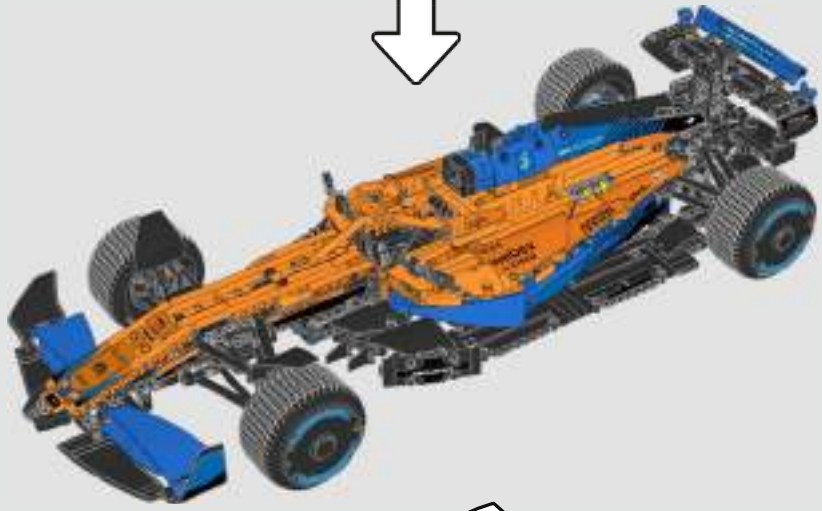

240 316

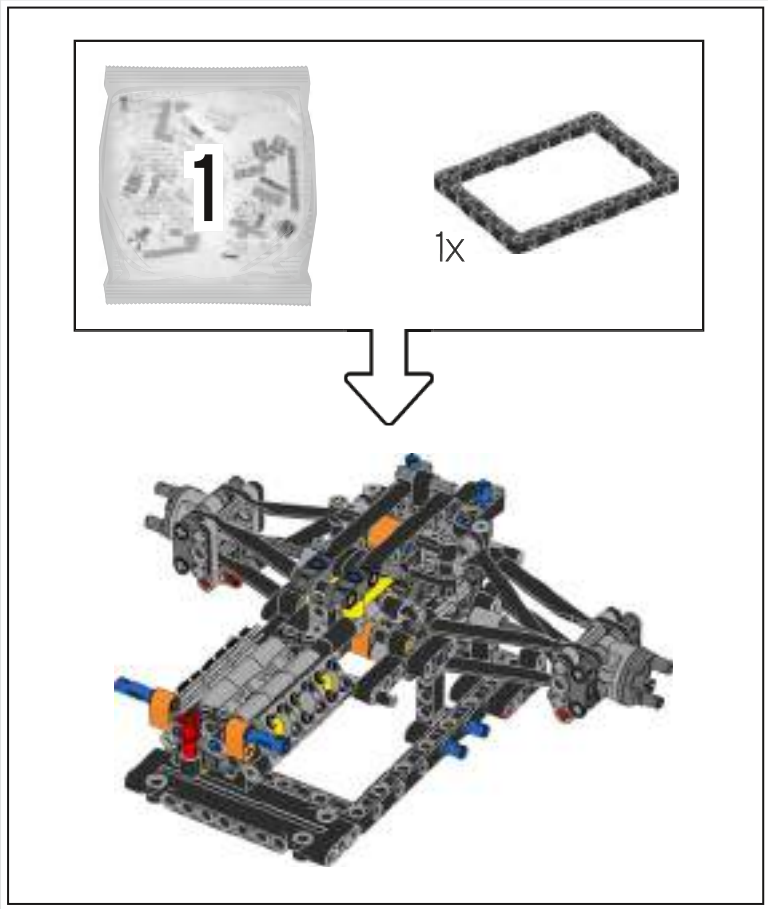
1
1x

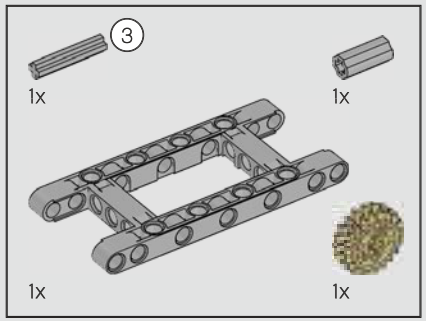

1

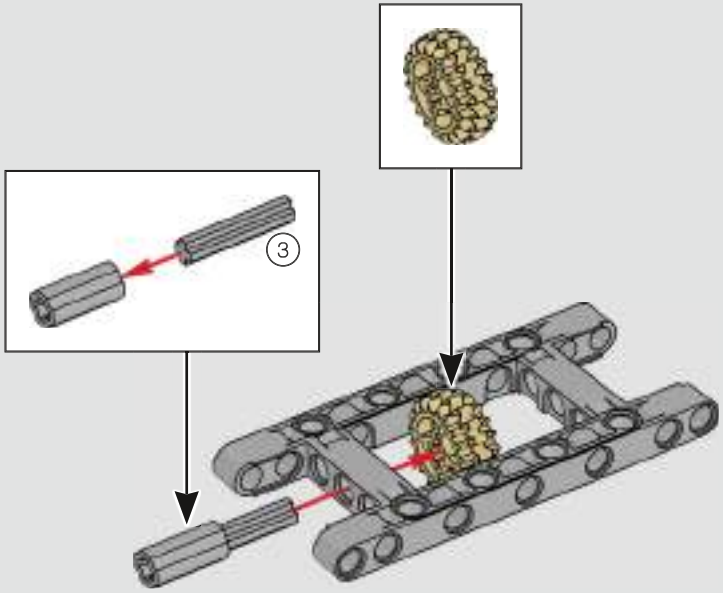

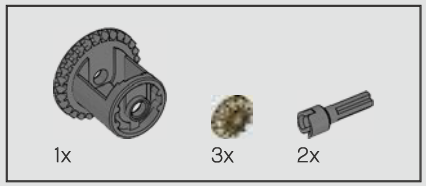

2

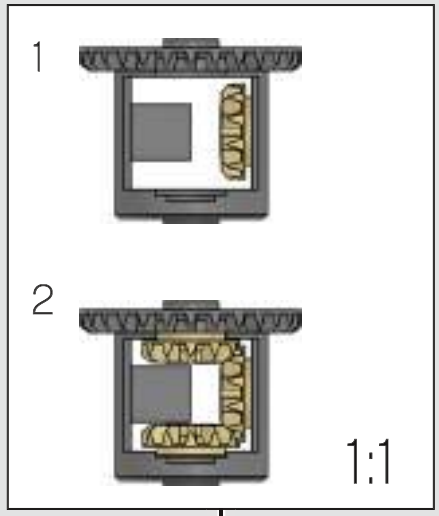

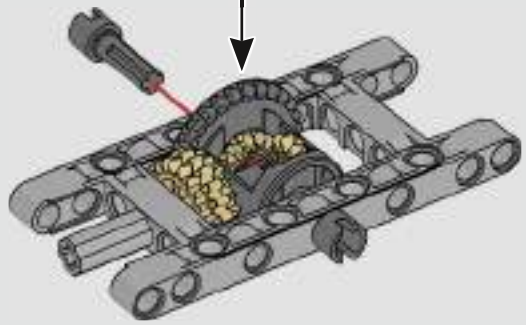

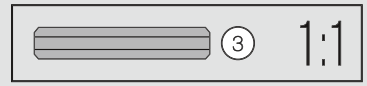

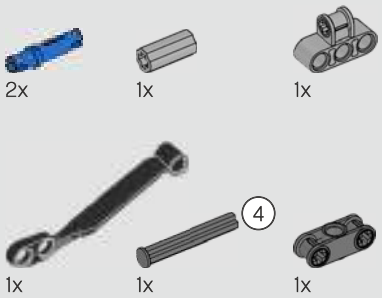

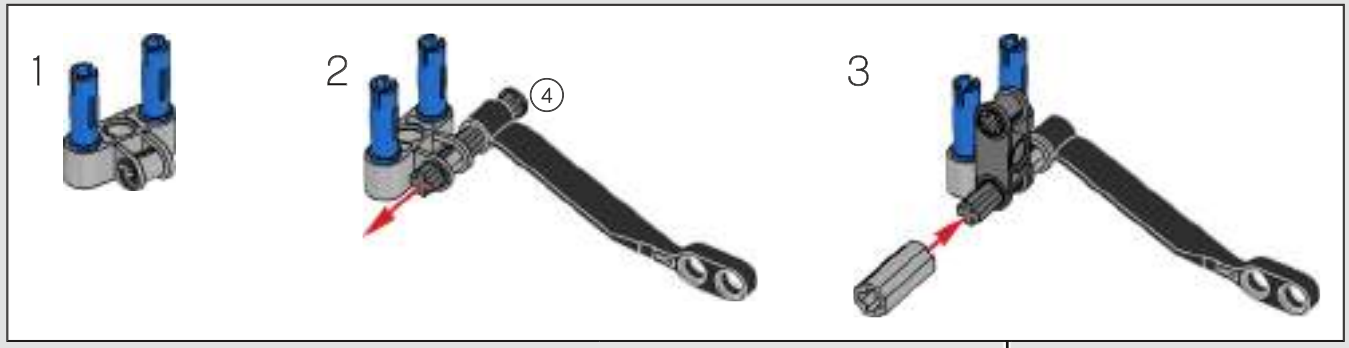

3

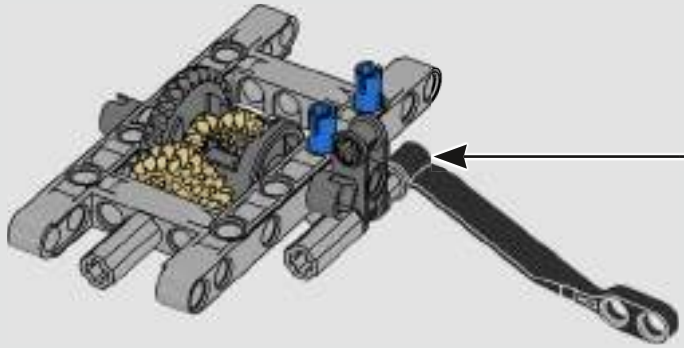

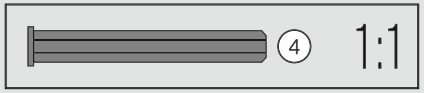

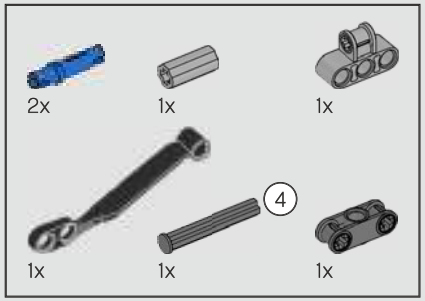

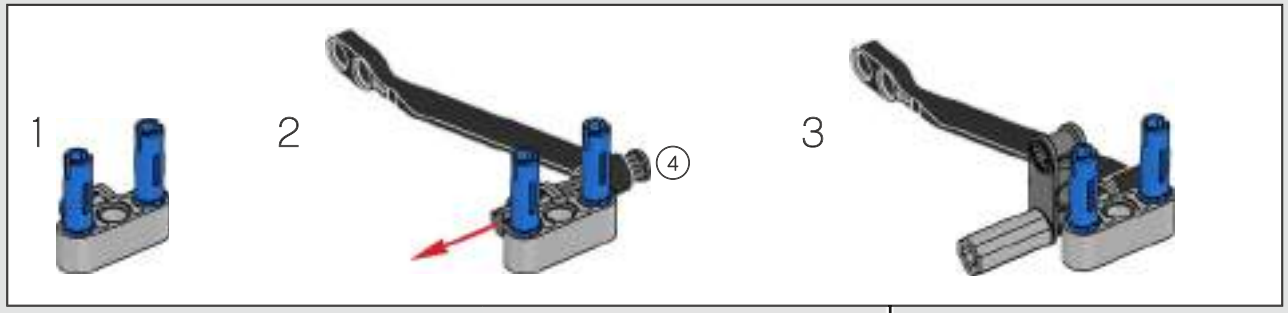

4

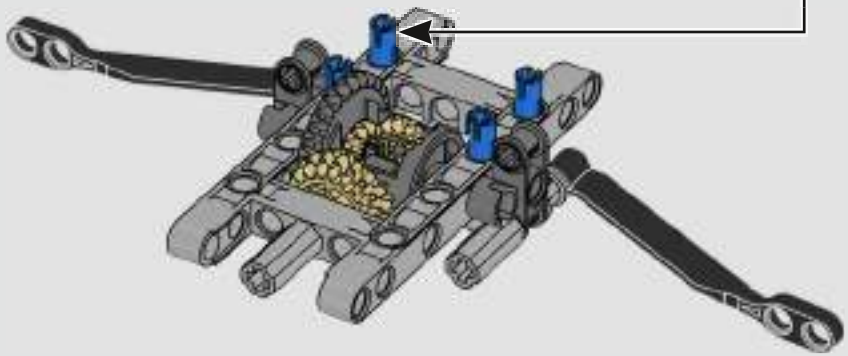

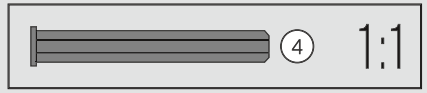

5

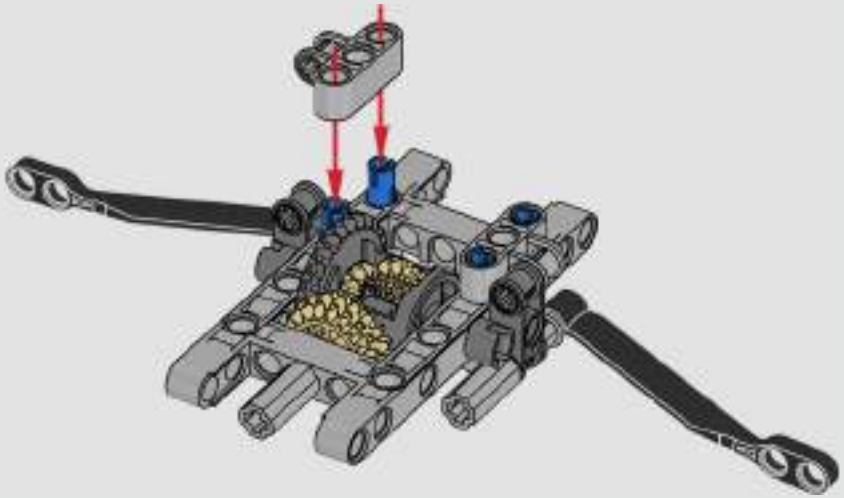

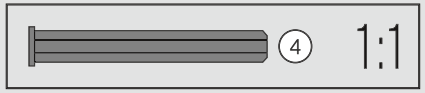

6

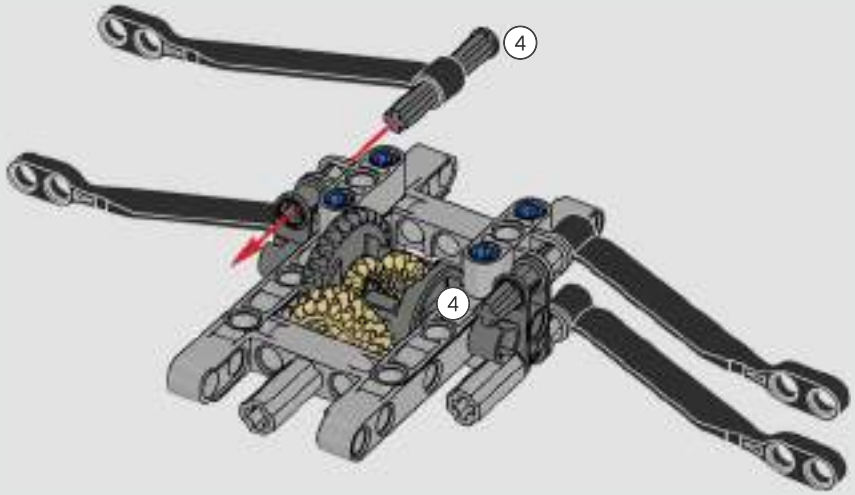

2x

7

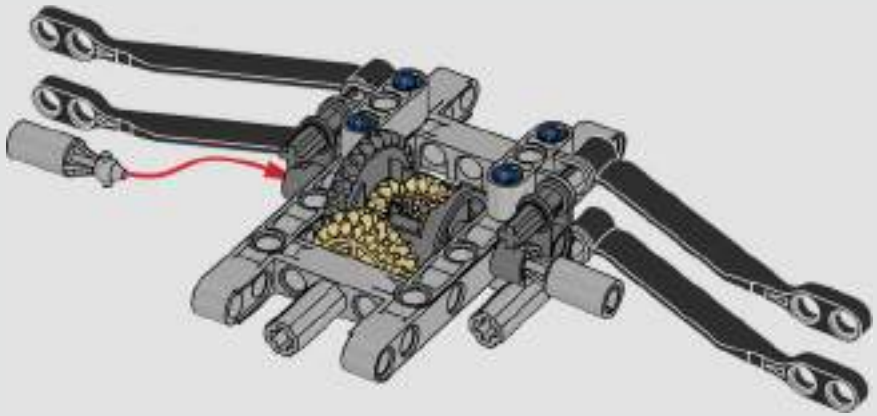

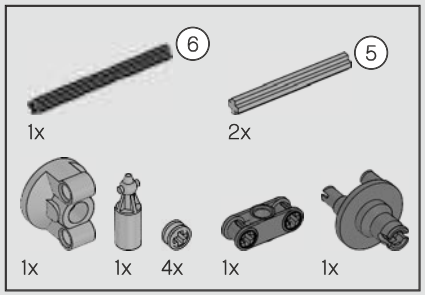

8

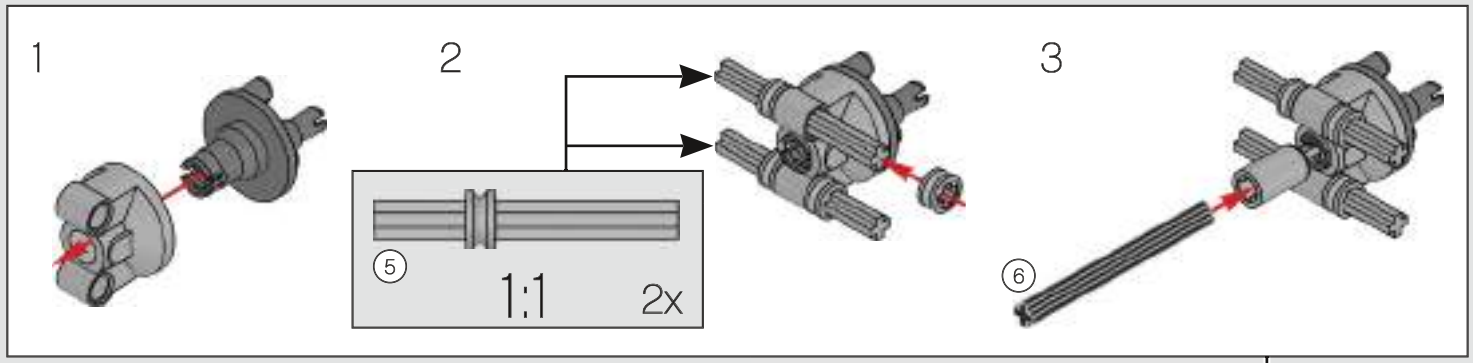

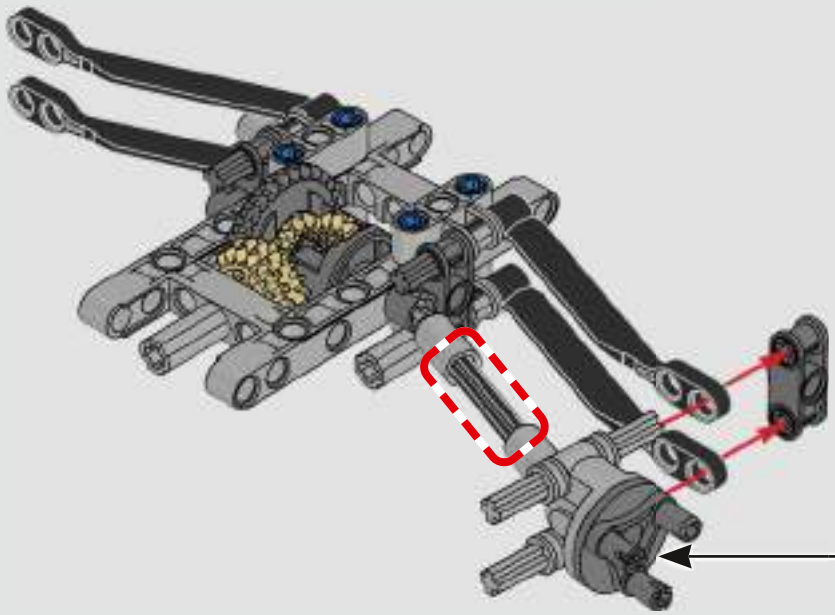

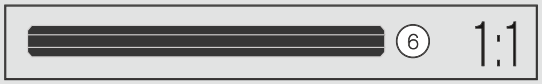

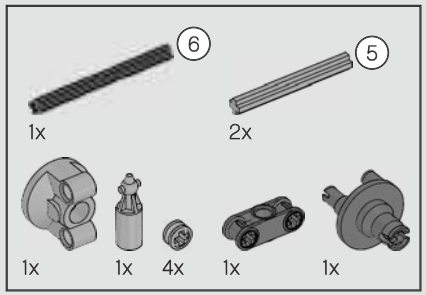

9

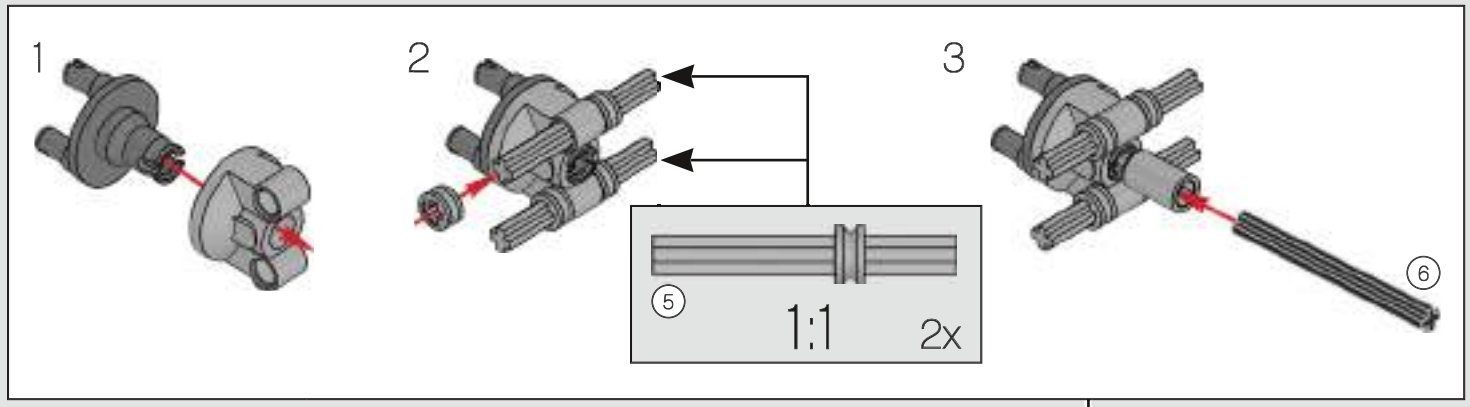

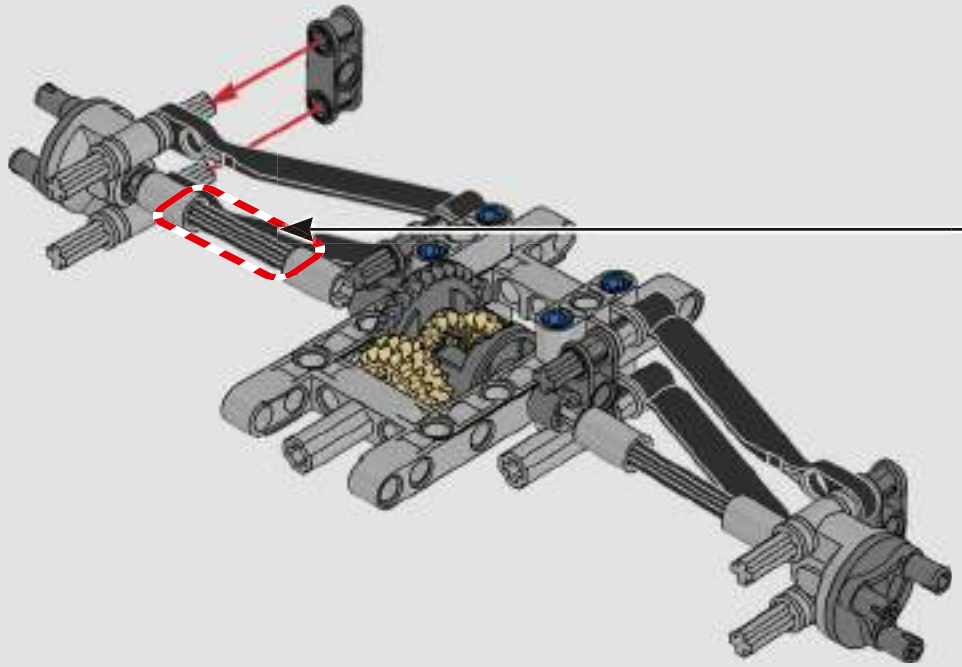

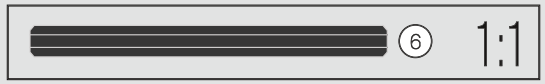

10

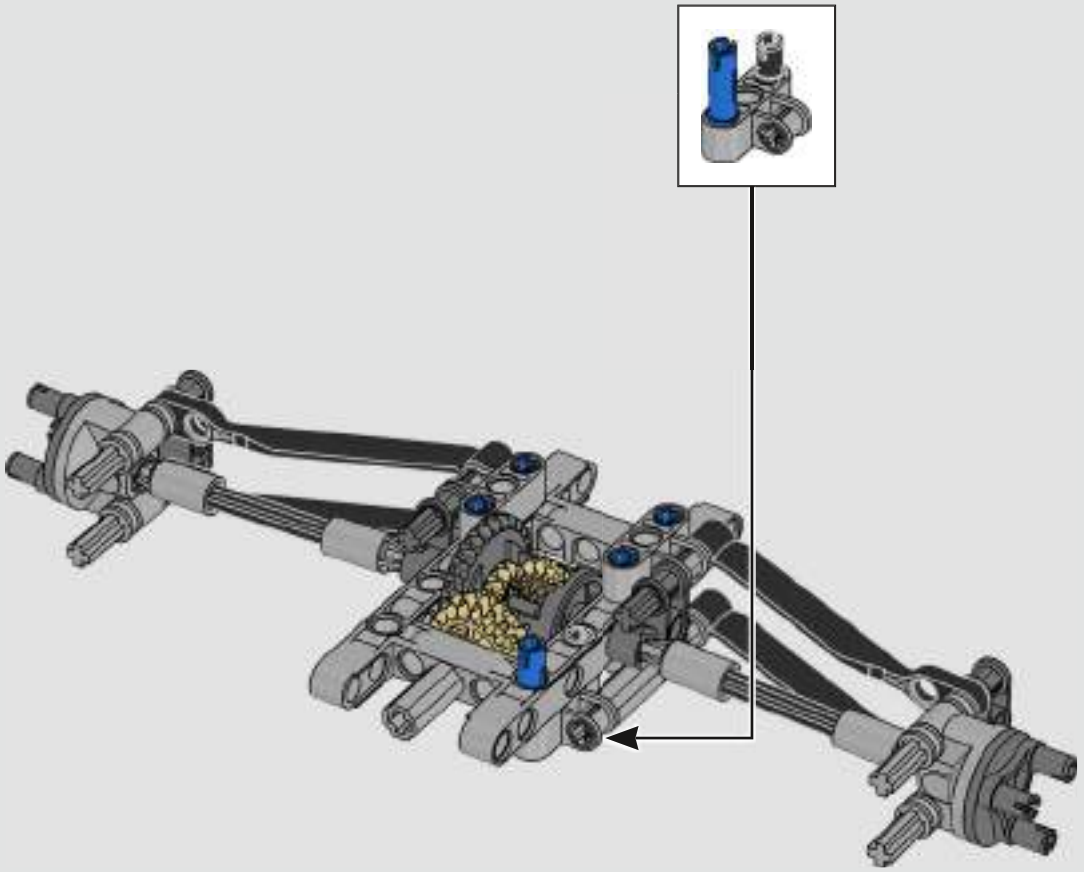

11

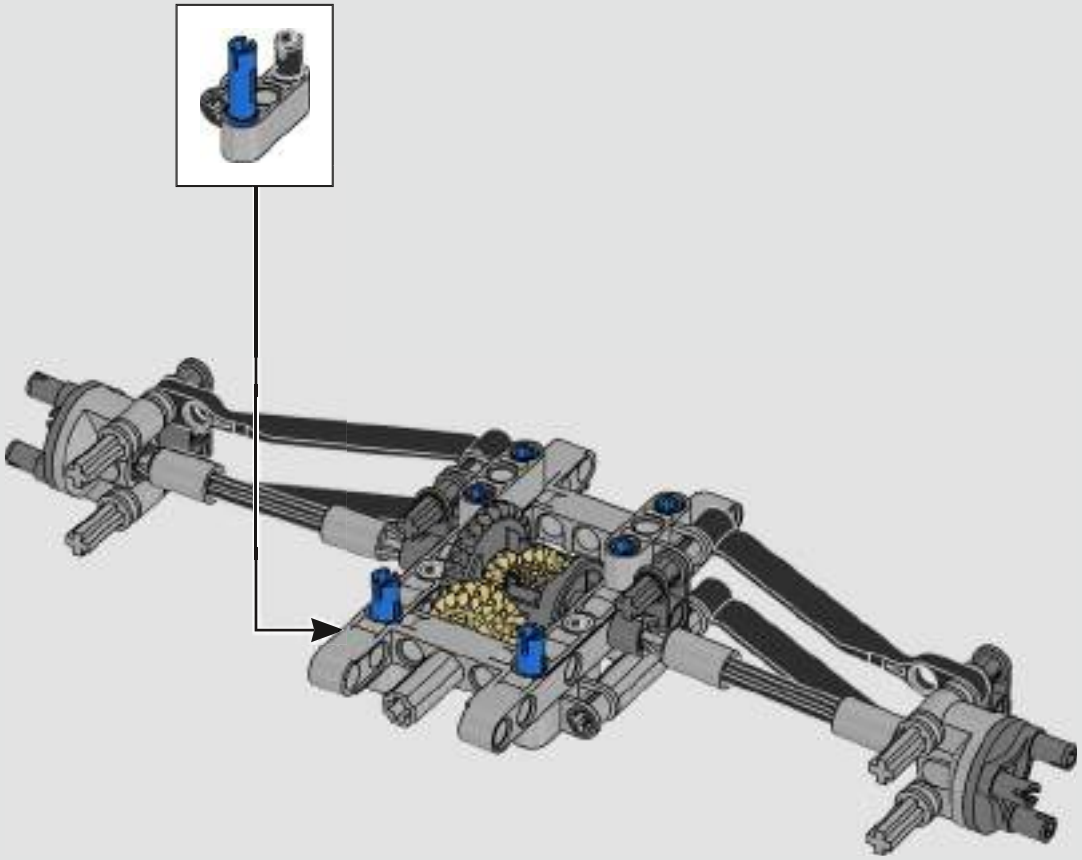

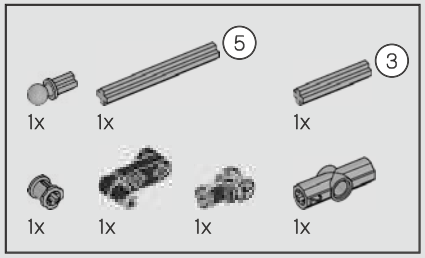

12

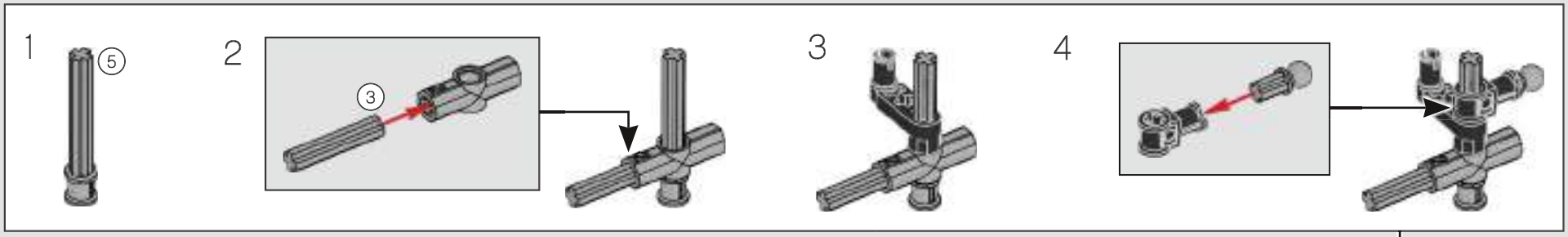

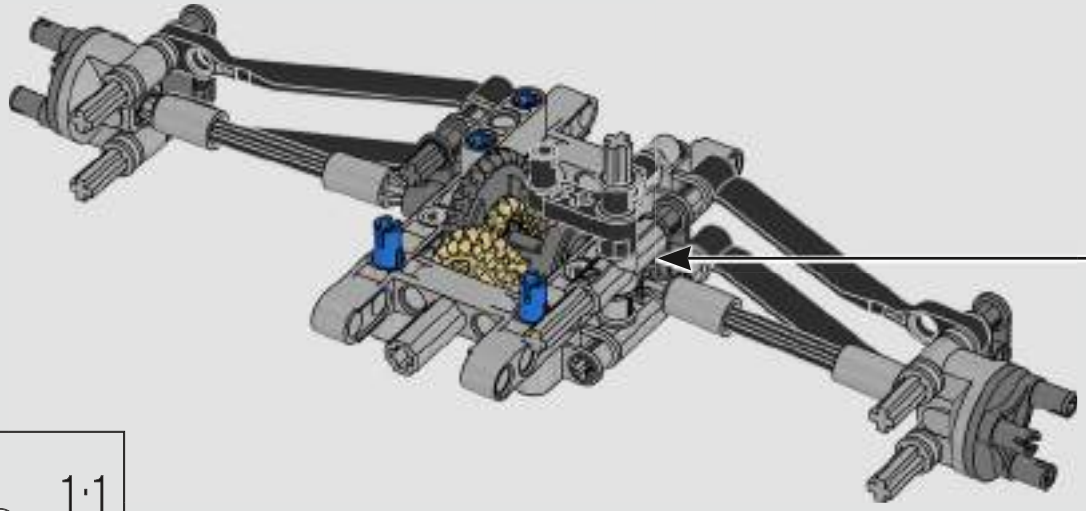

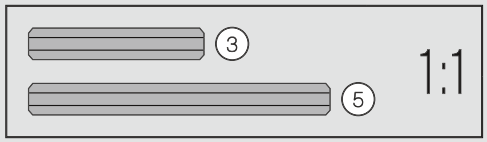

13

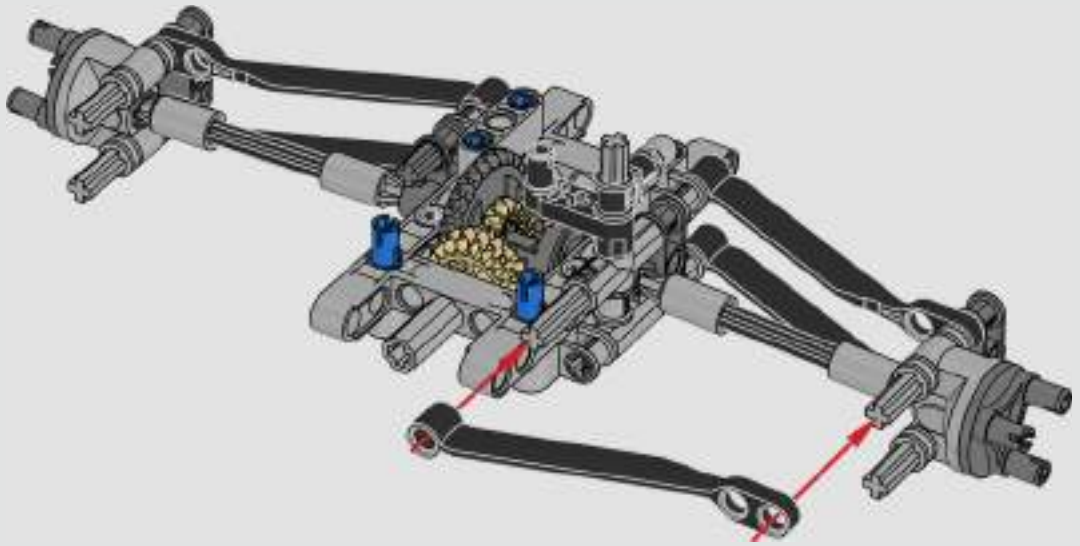

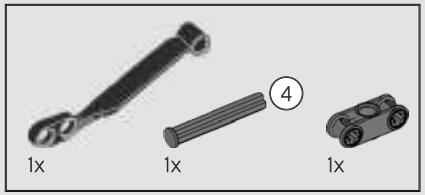

14

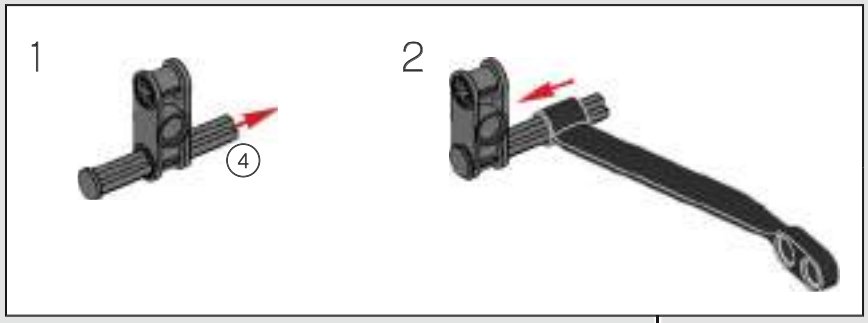

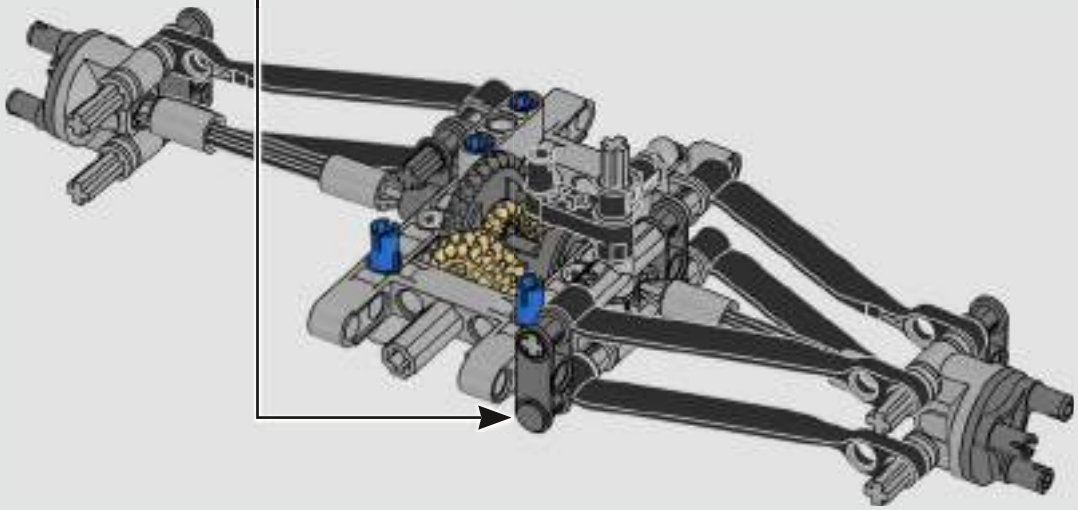

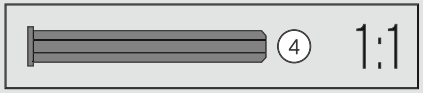

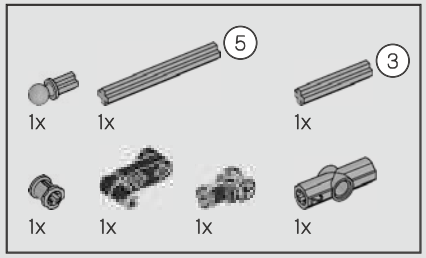

15

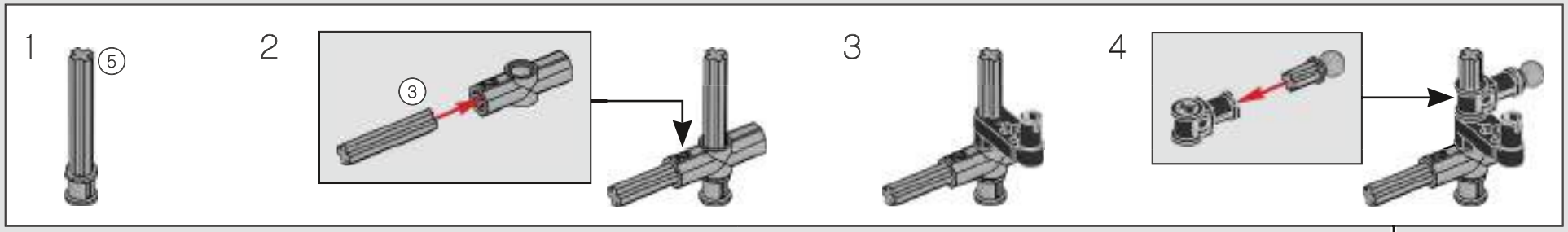

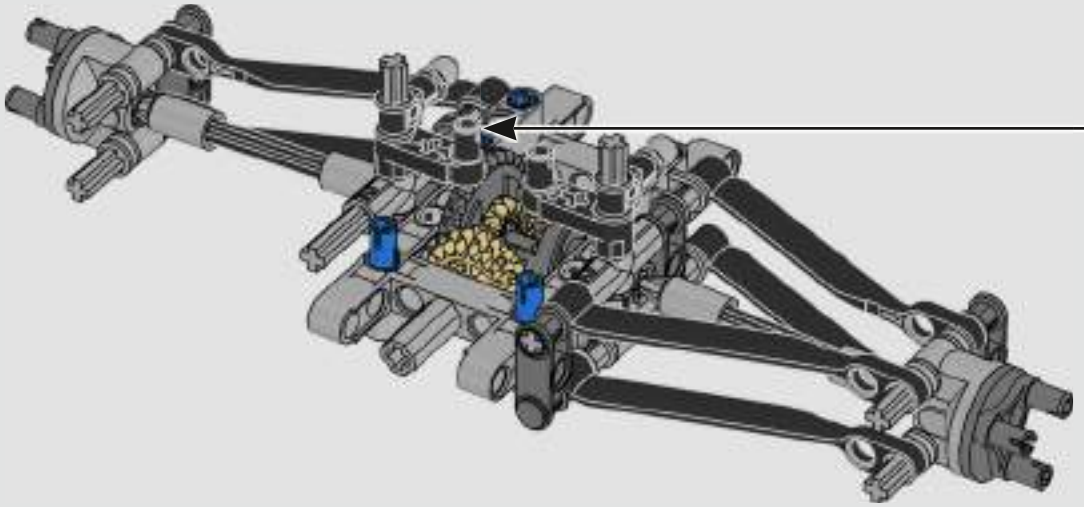

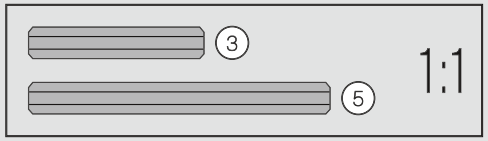

16

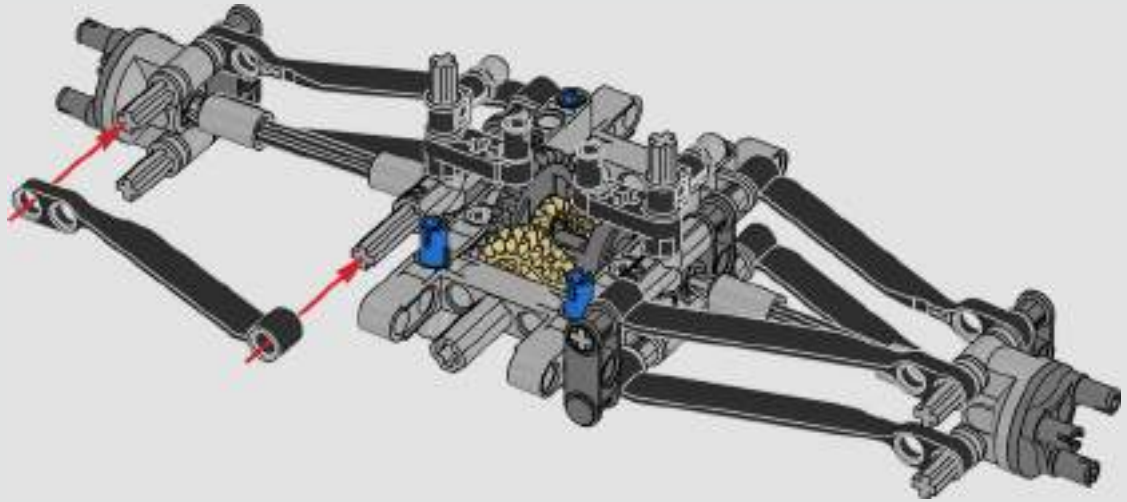

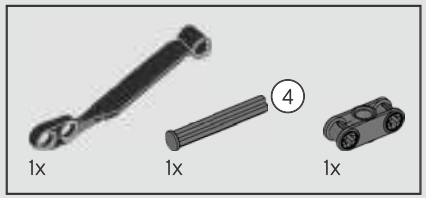

17

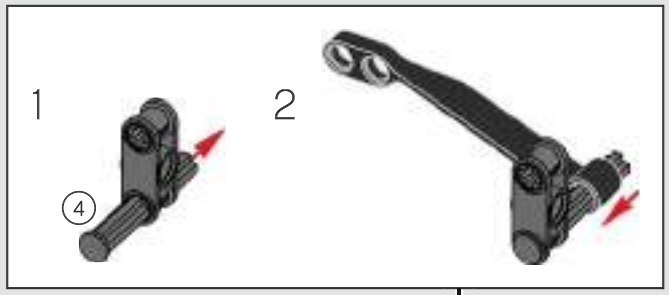

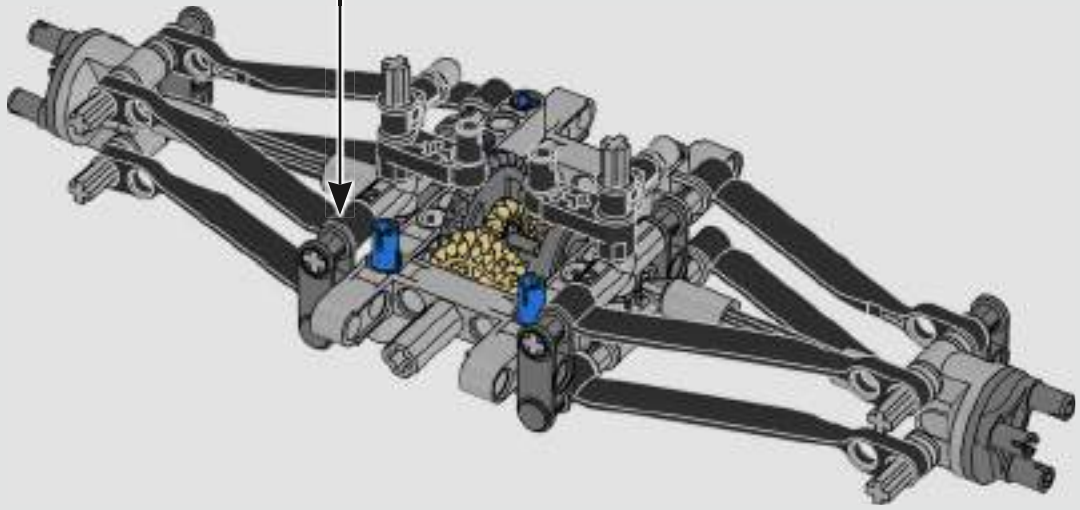

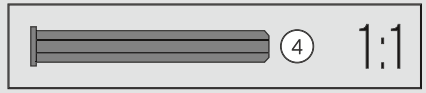

2x

18

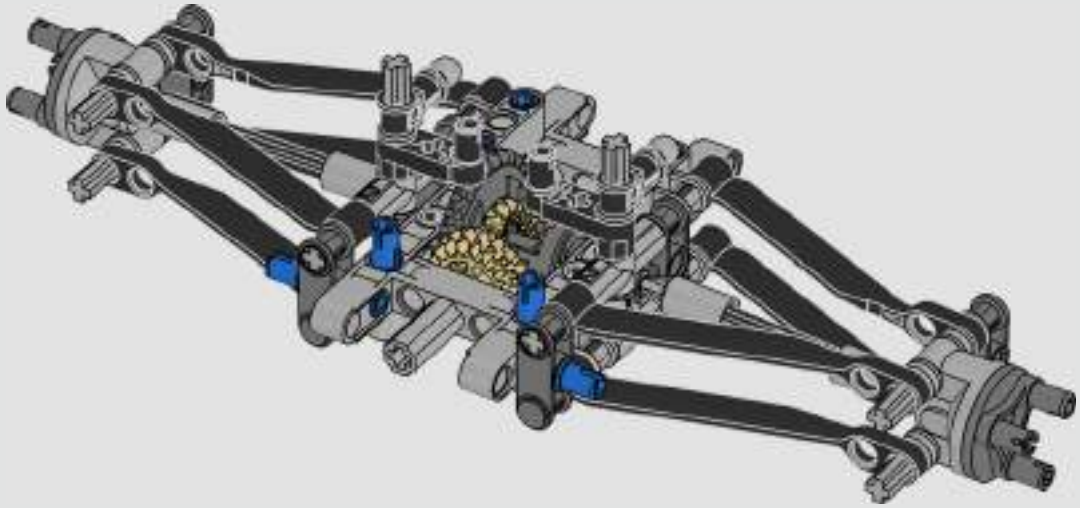

2x

19

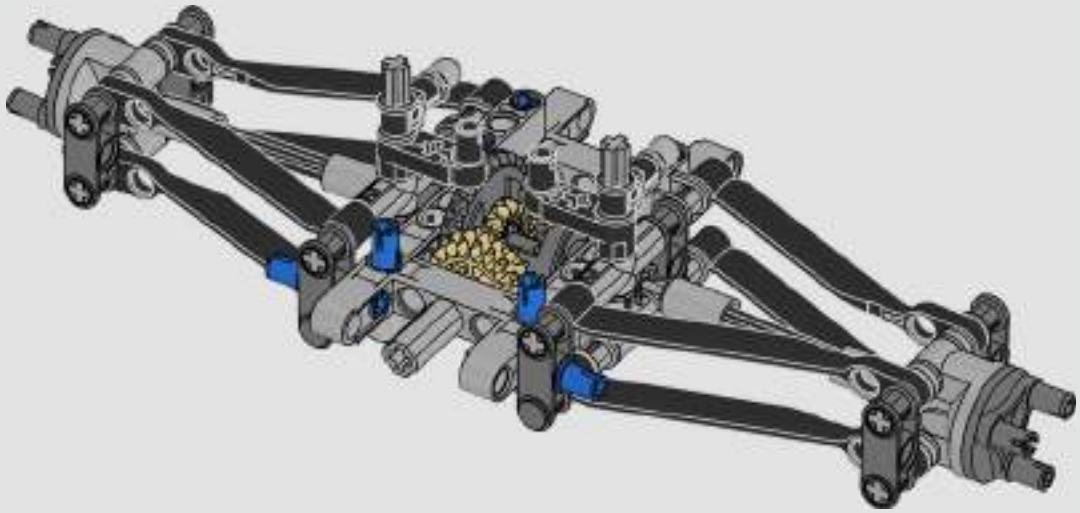

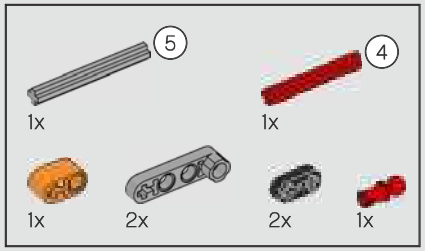

20

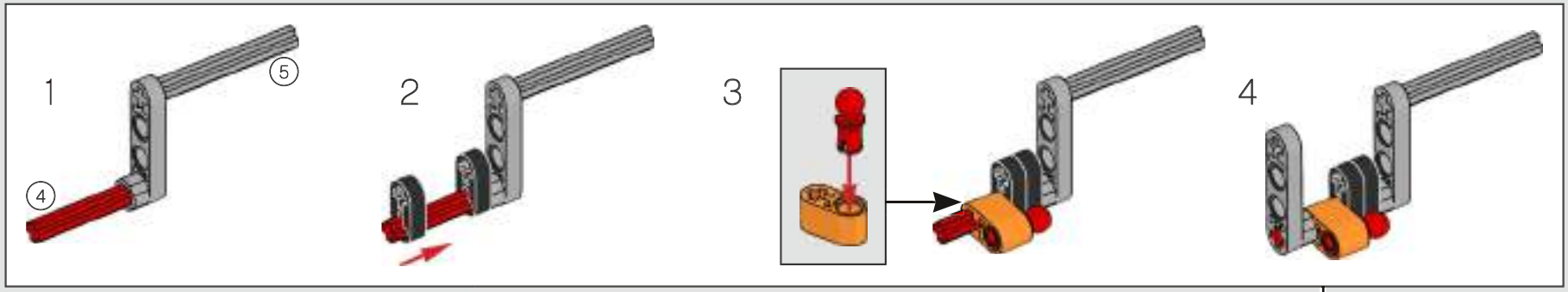

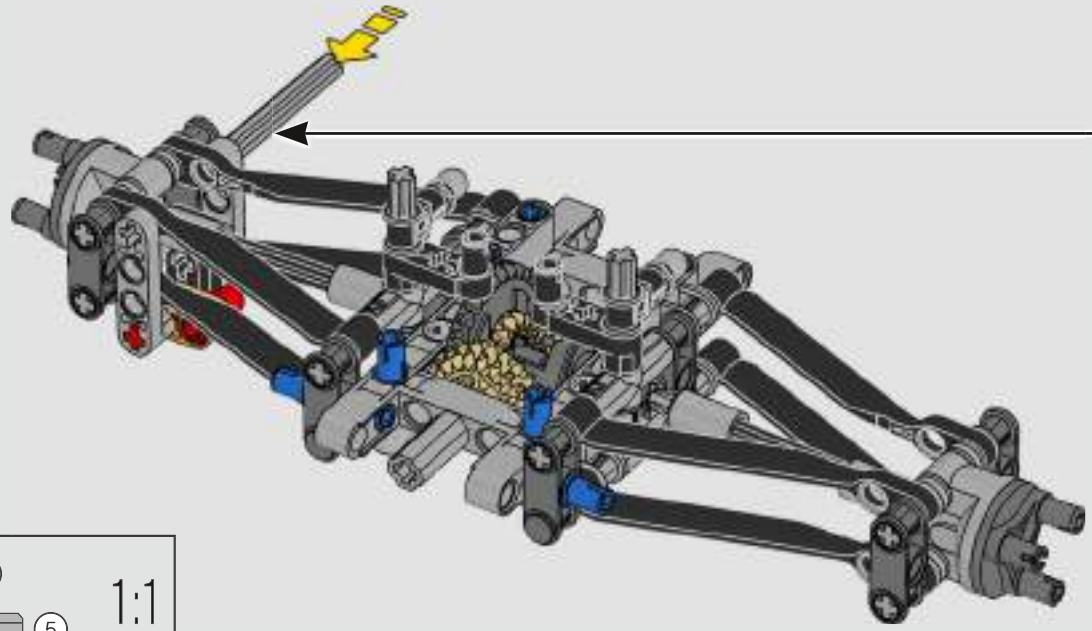

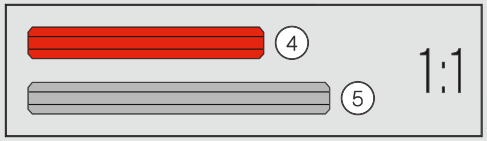

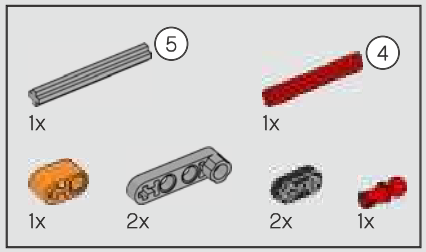

21

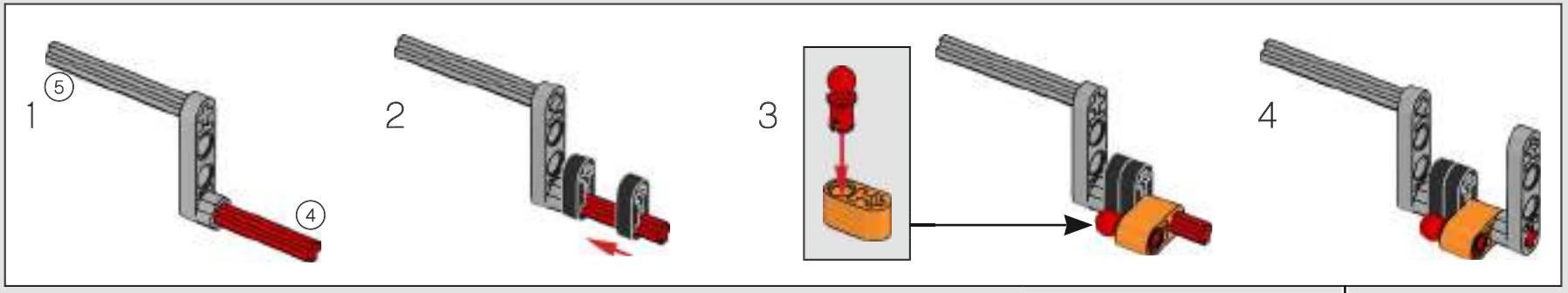

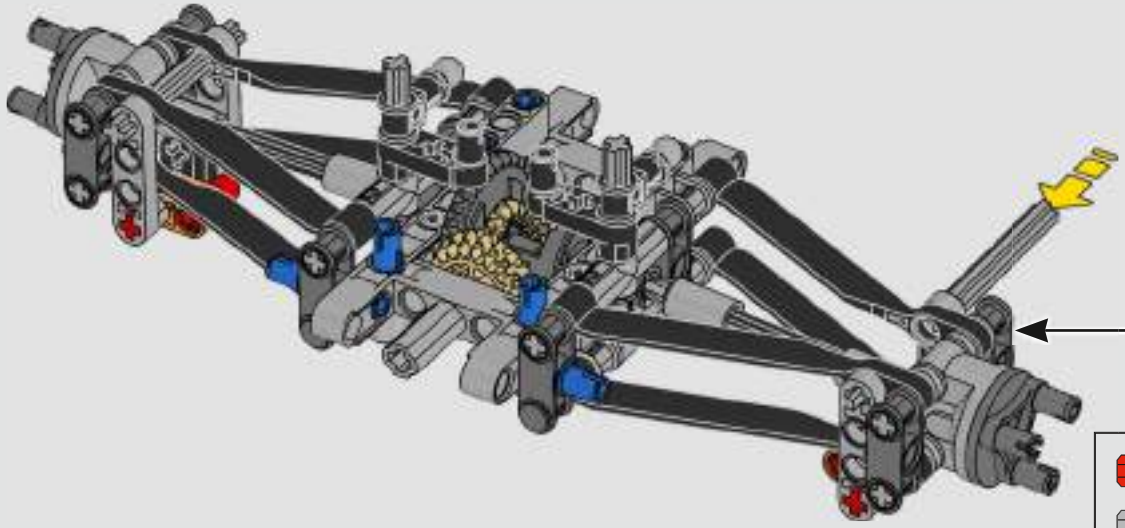

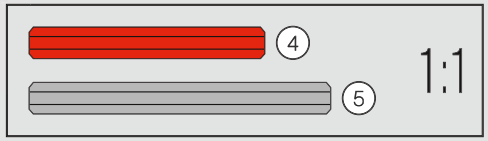

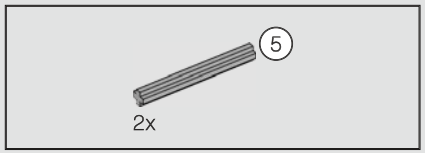

22

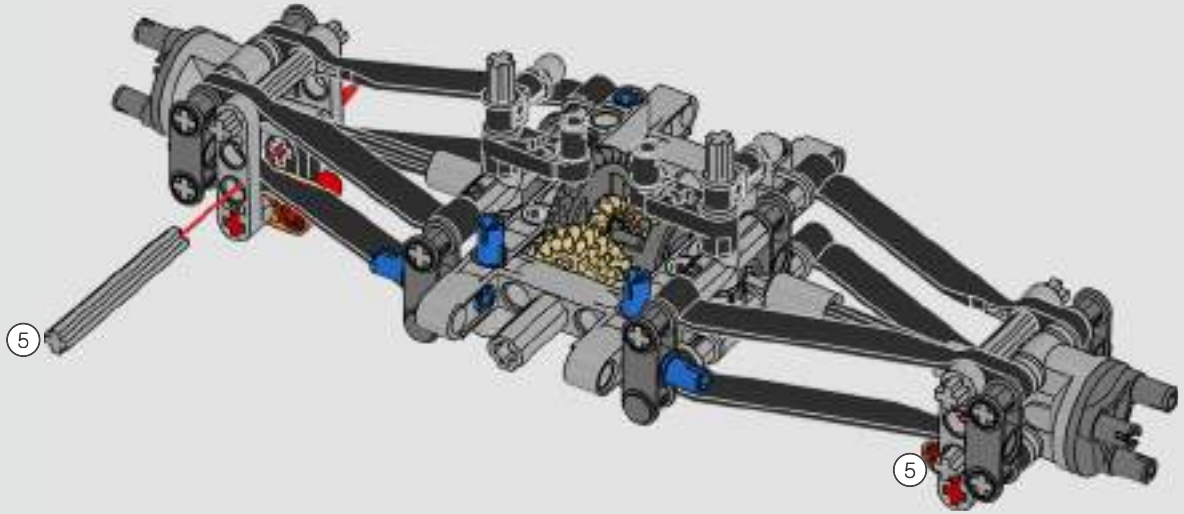

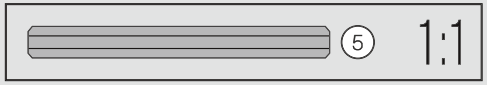

4x

23

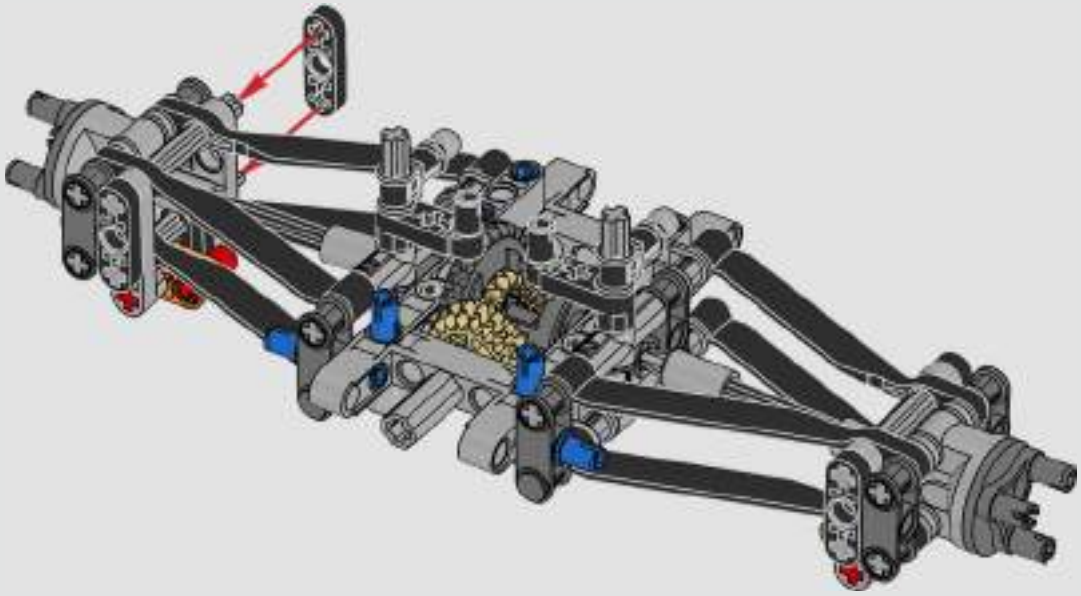

24

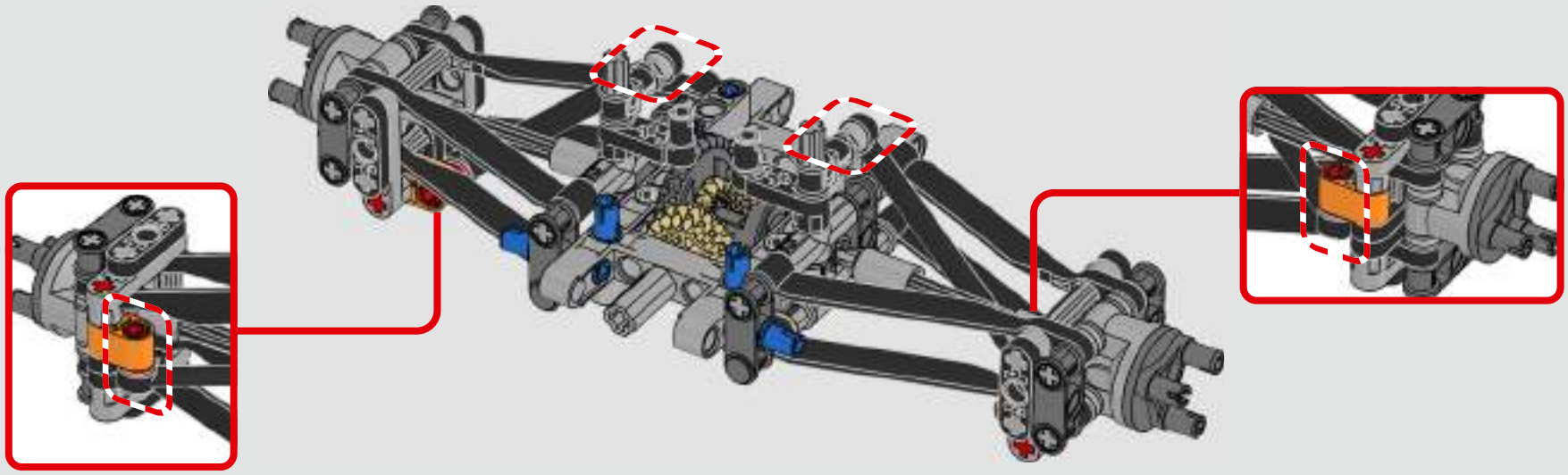

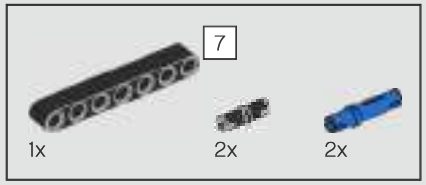

25

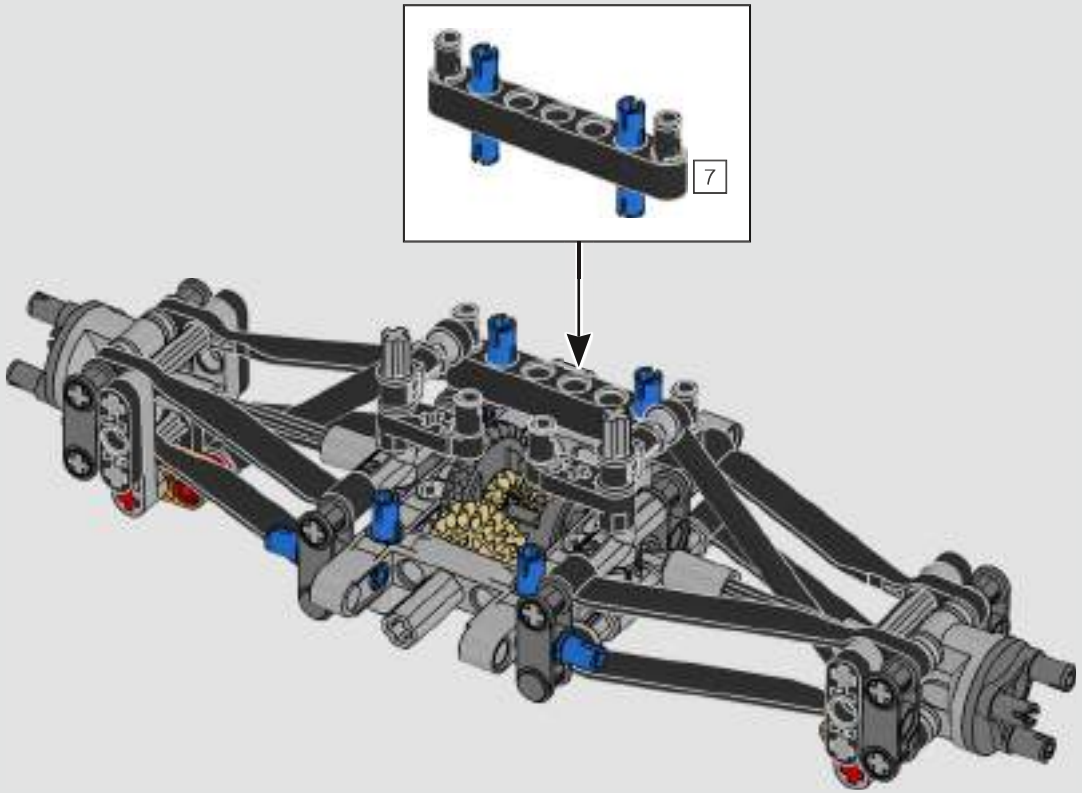

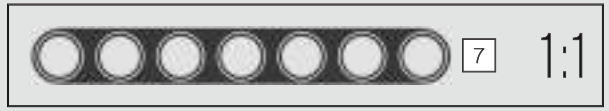

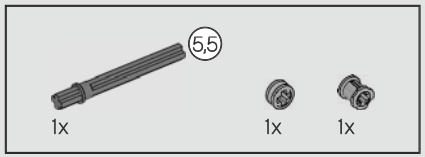

26

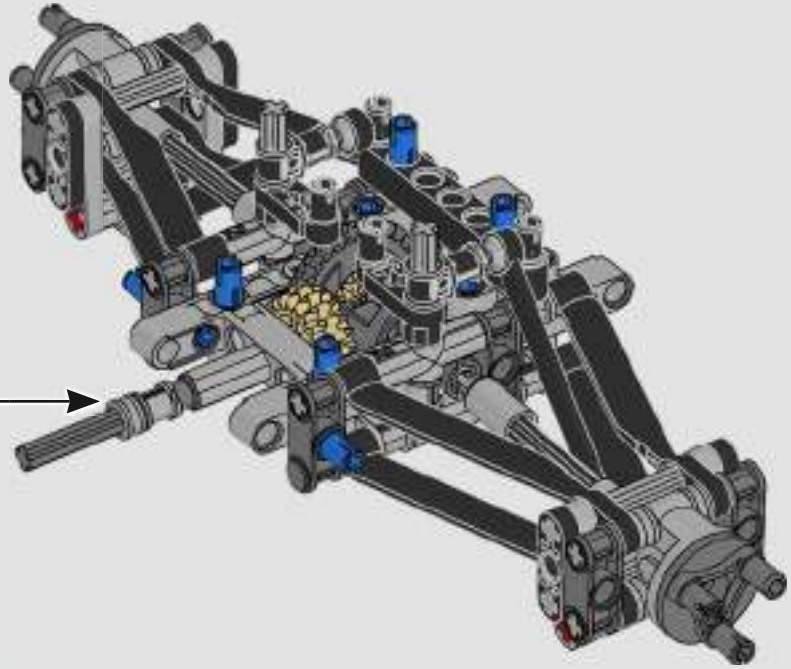

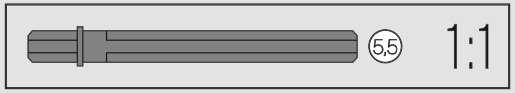

2x

27

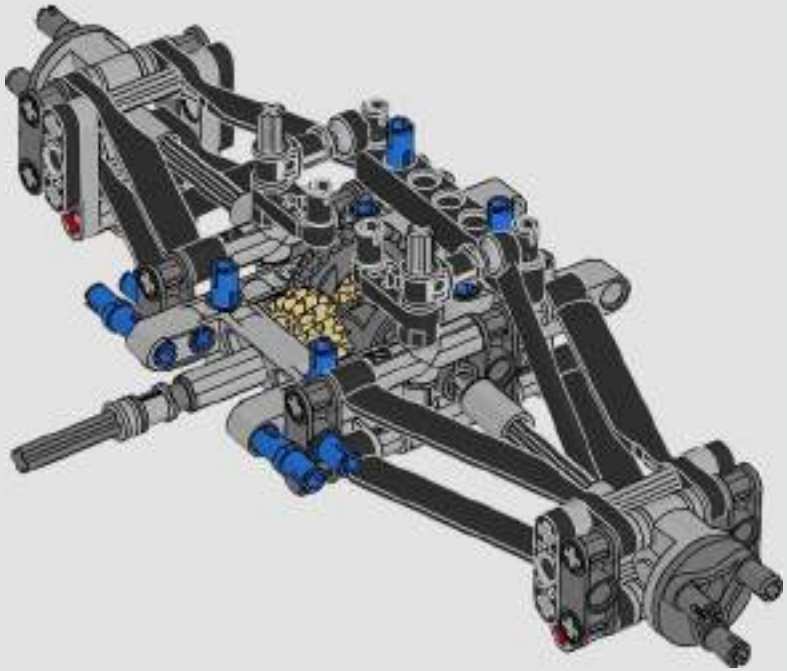

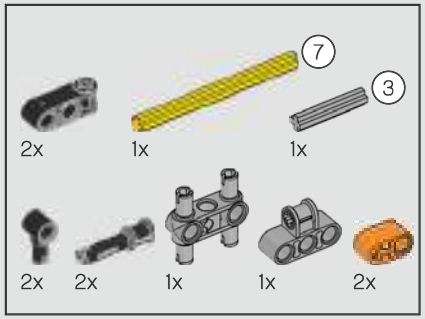

28

1

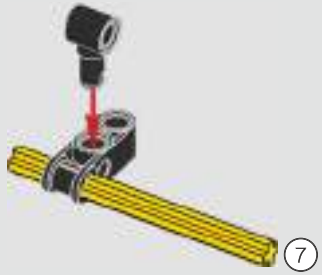

2

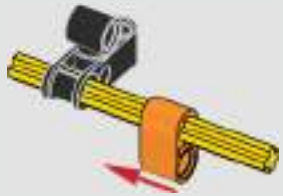

3

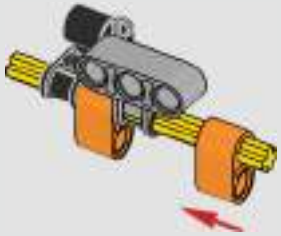

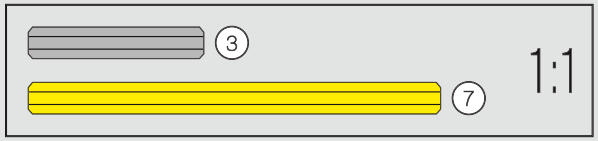

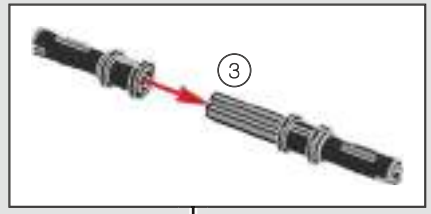

4

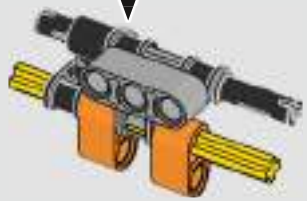

5

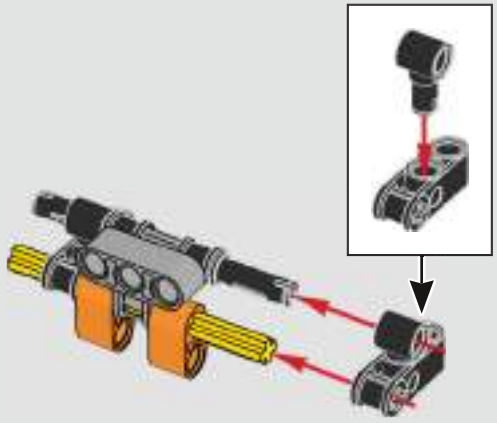

6

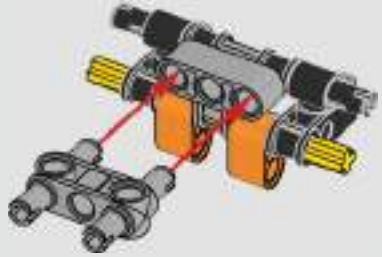

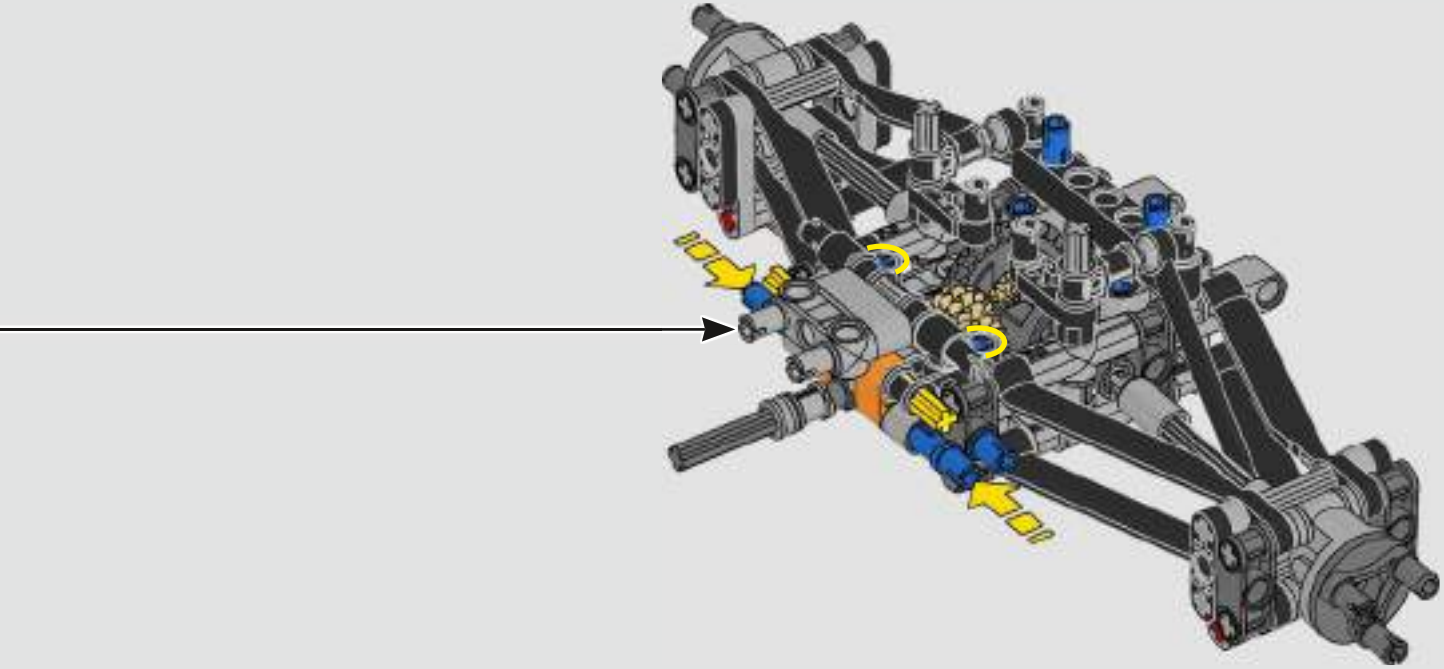

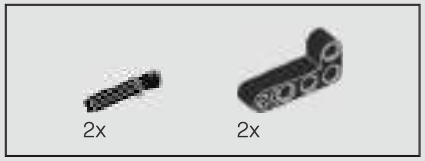

29

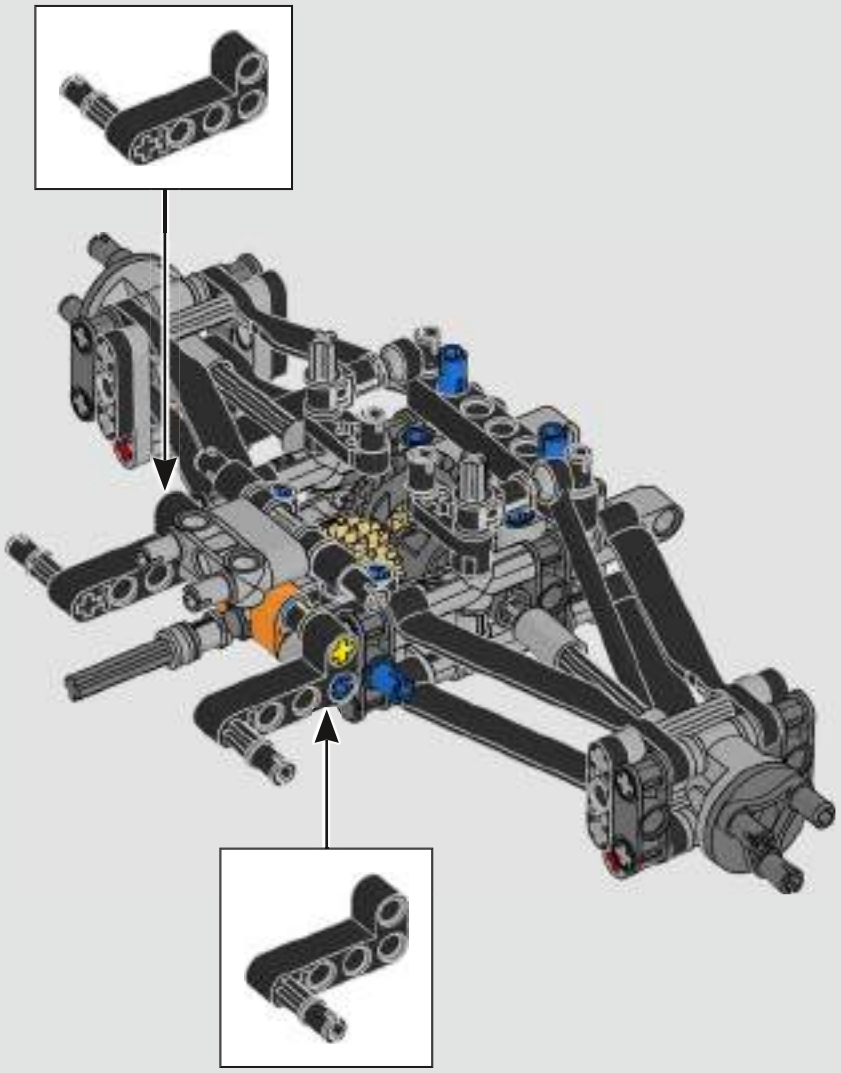

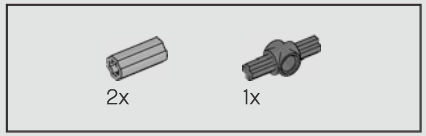

30

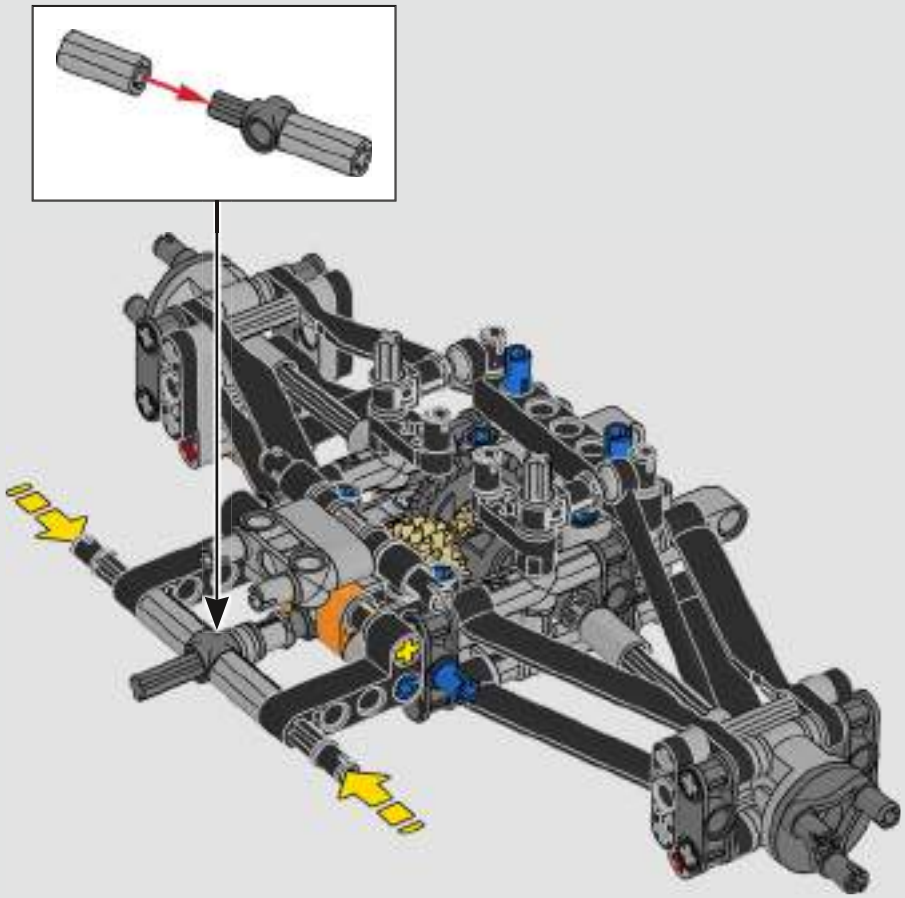

31

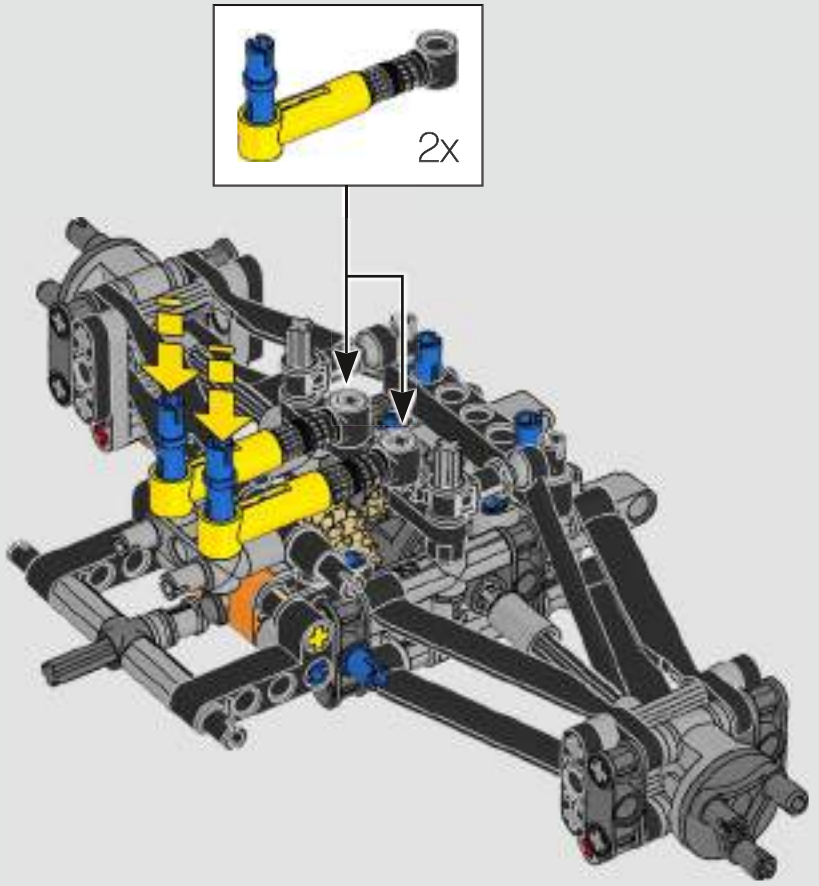

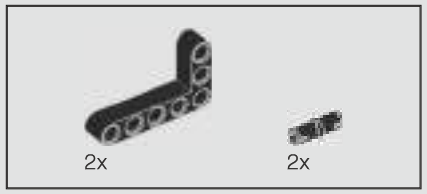

32

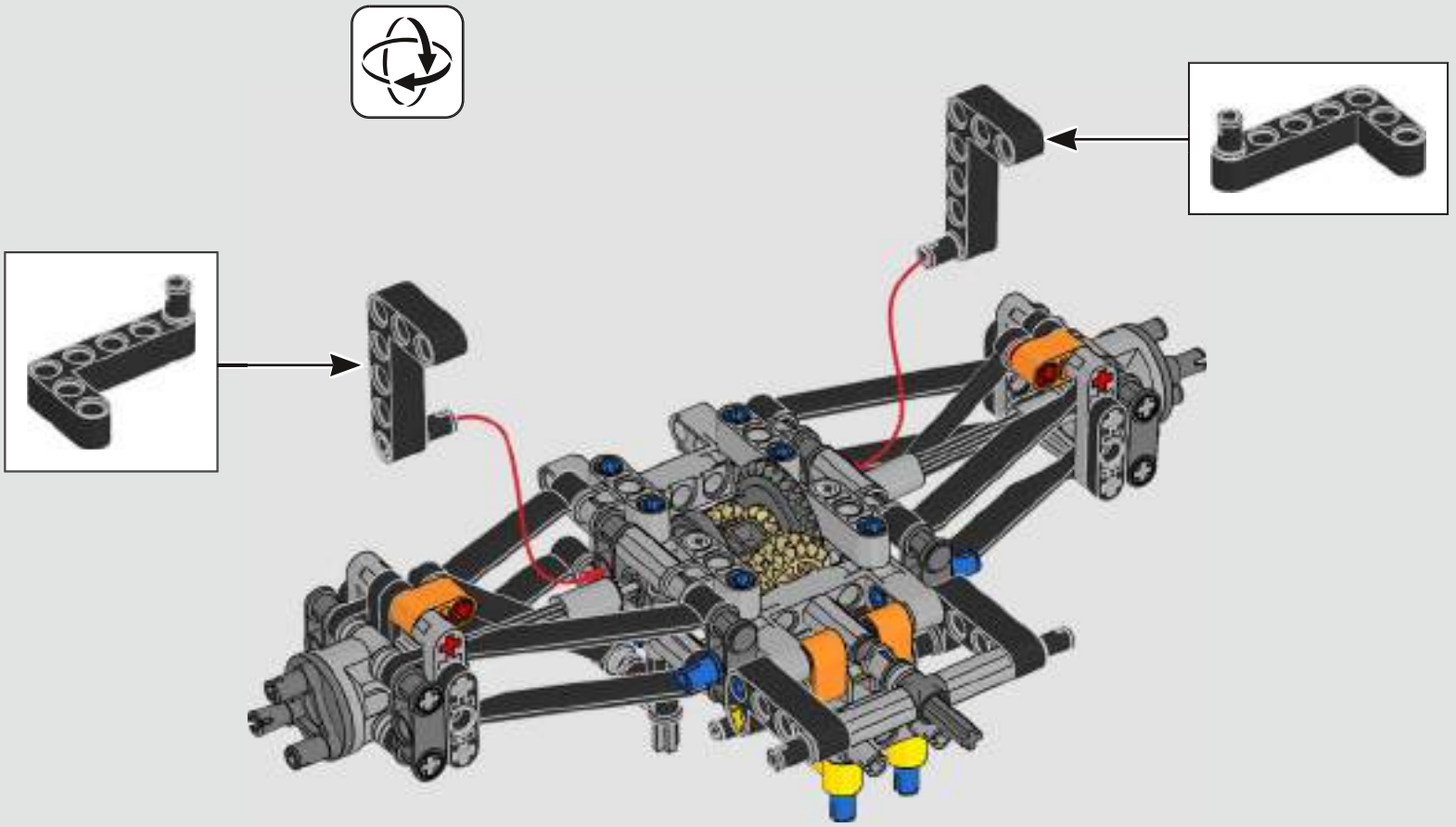

2x

33

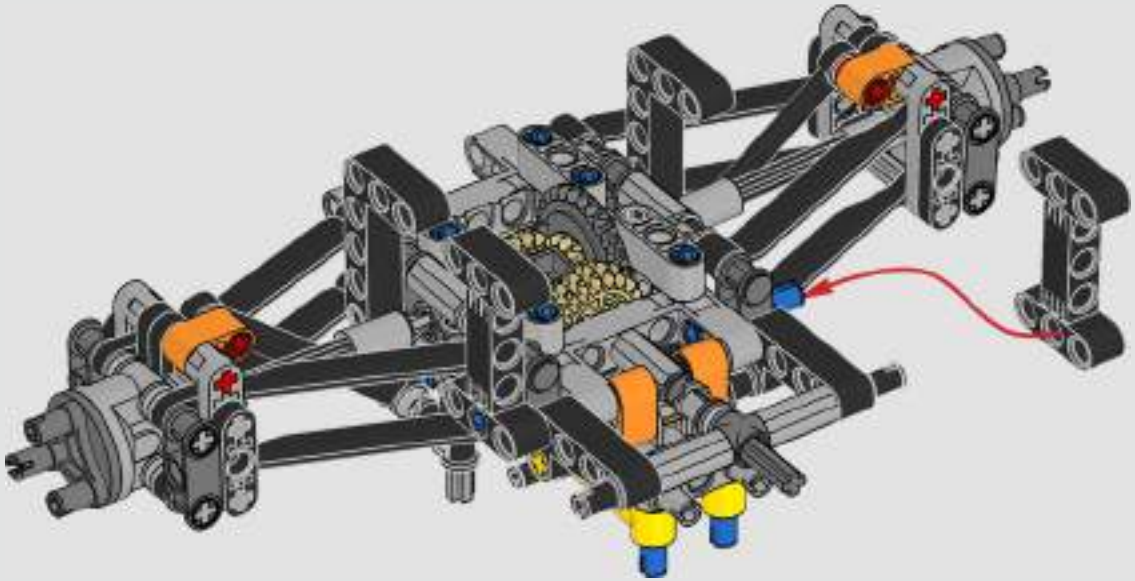

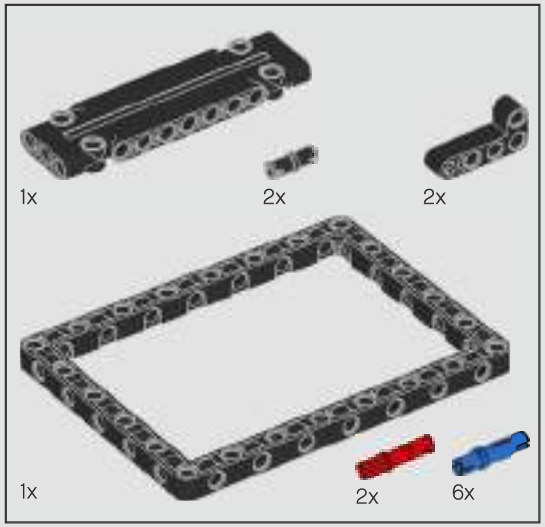

34

1

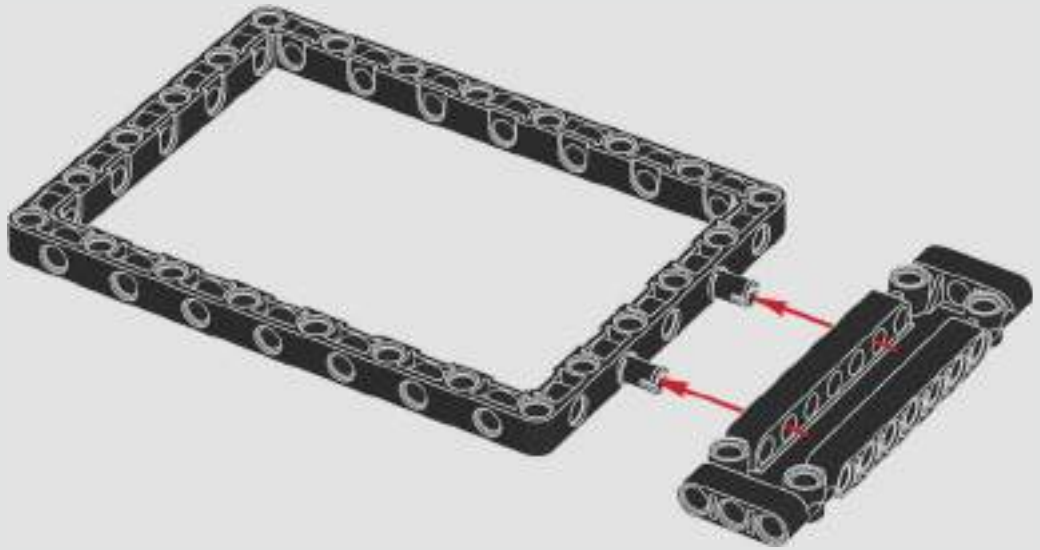

2

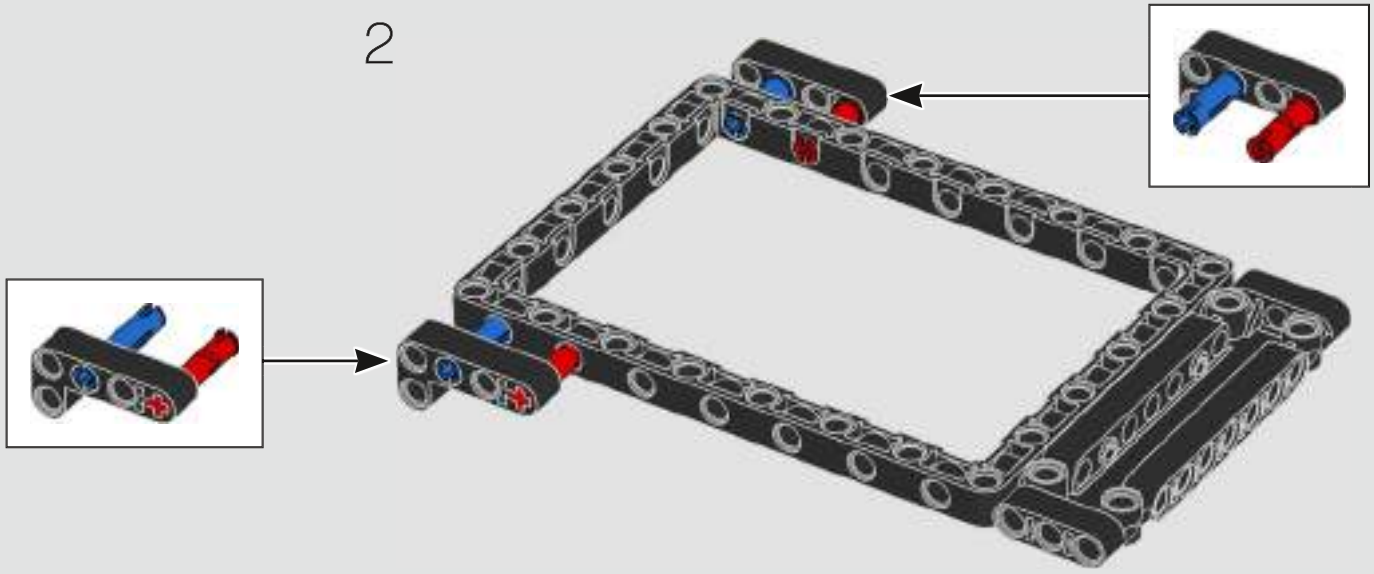

3

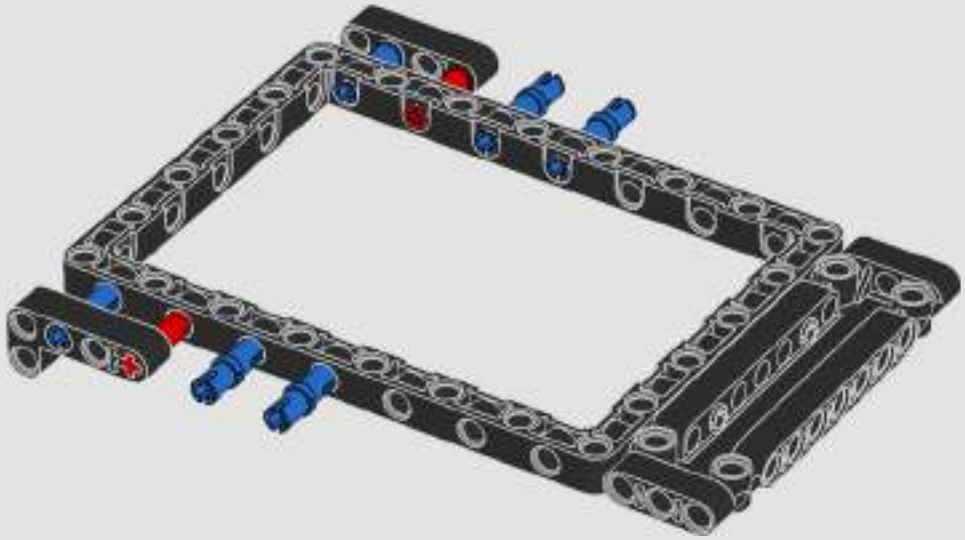

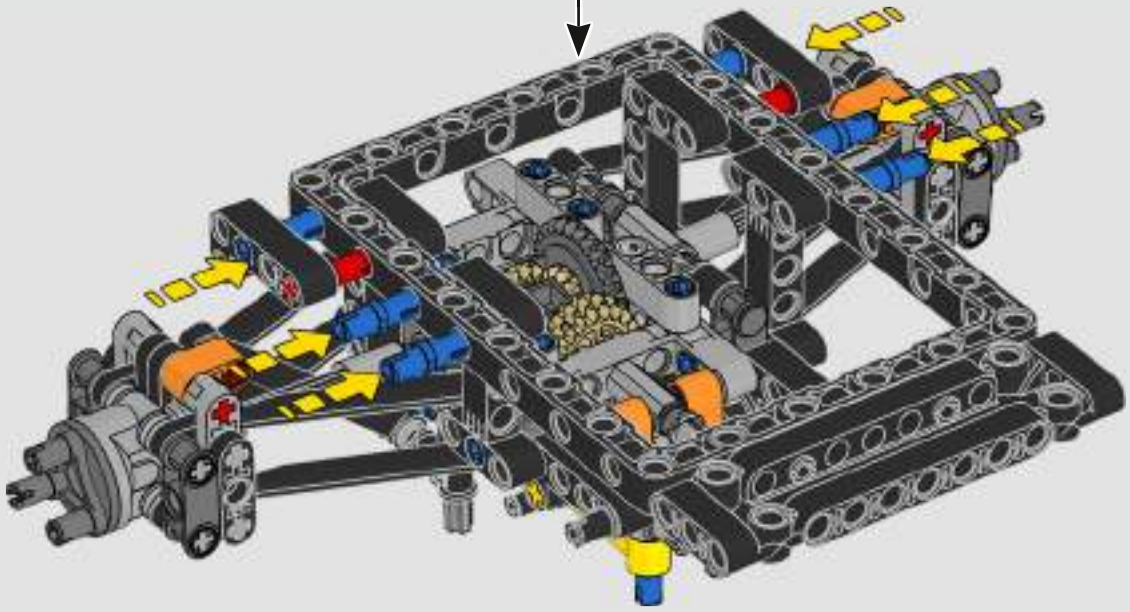

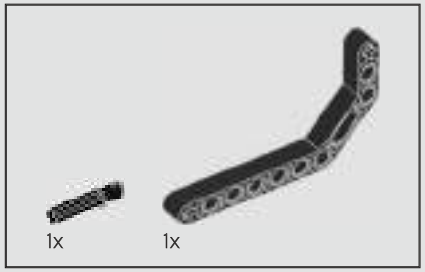

35

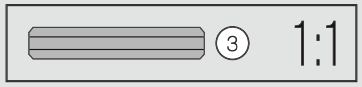

36

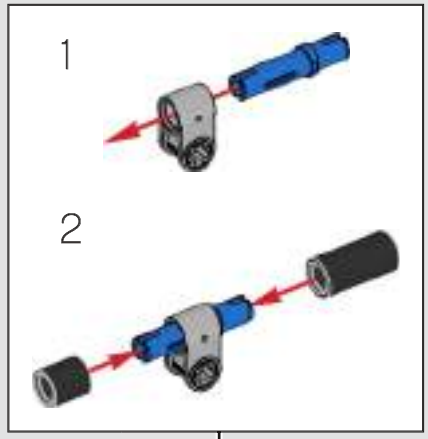

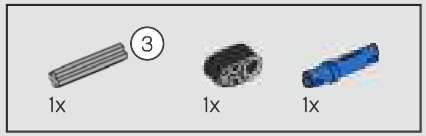

37

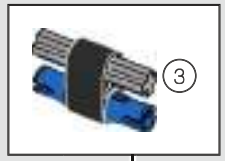

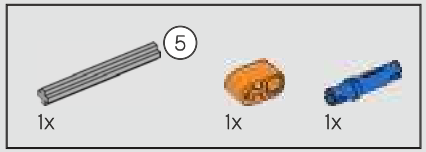

38

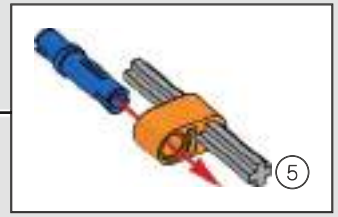

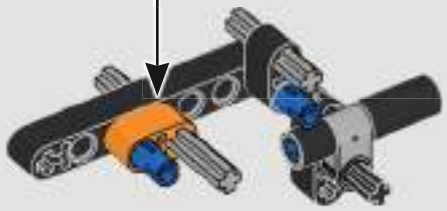

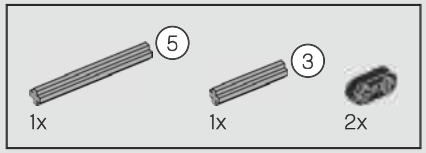

39

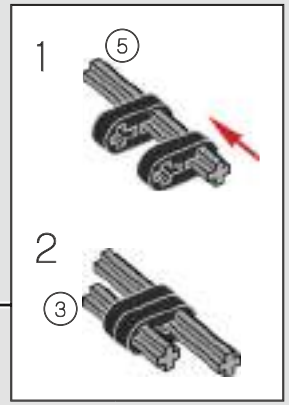

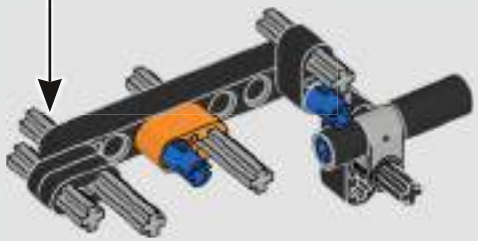

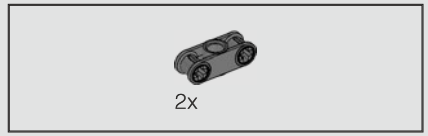

40

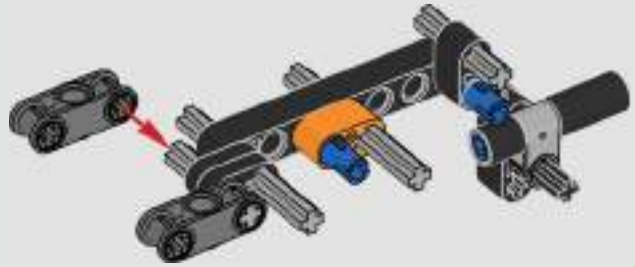

41

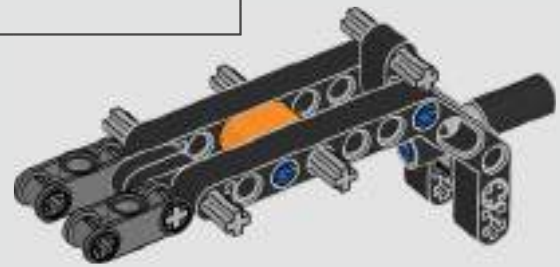

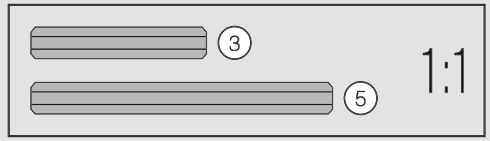

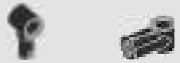

42

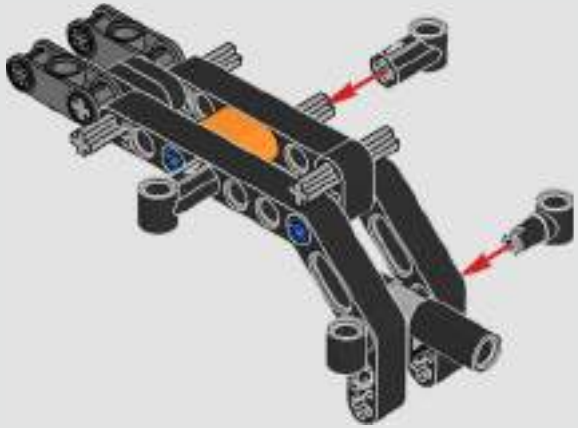

43

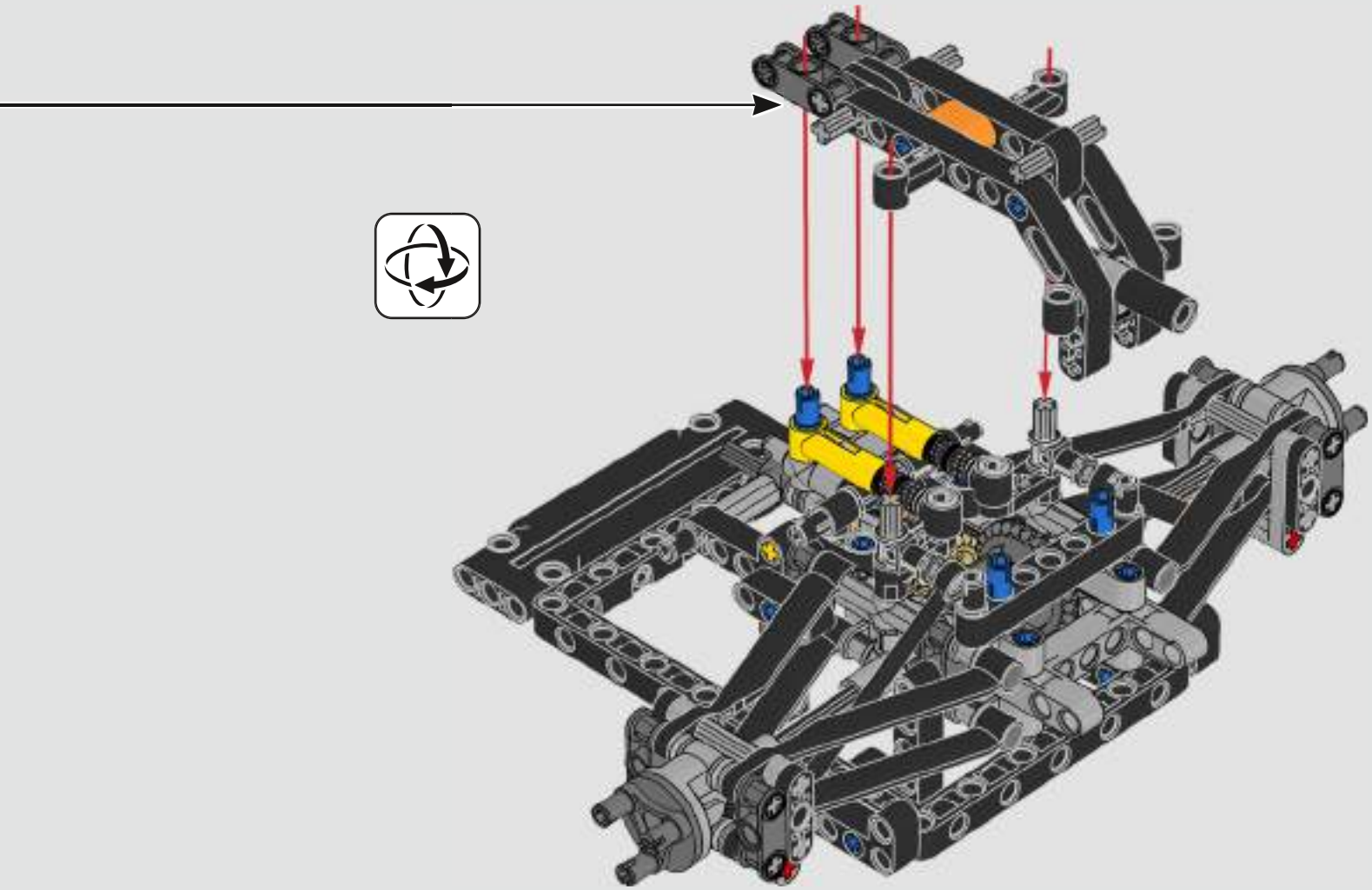

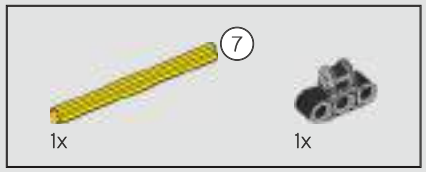

44

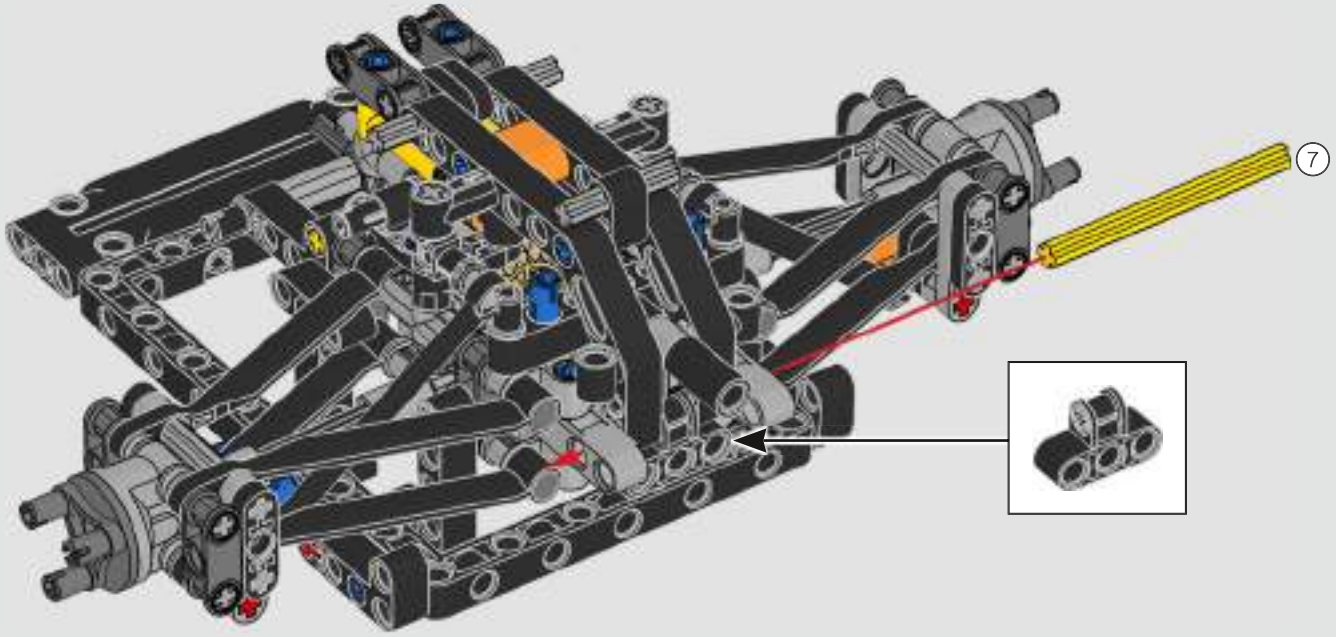

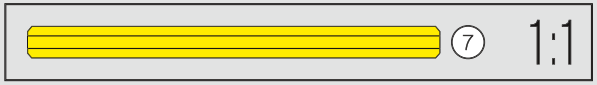

45

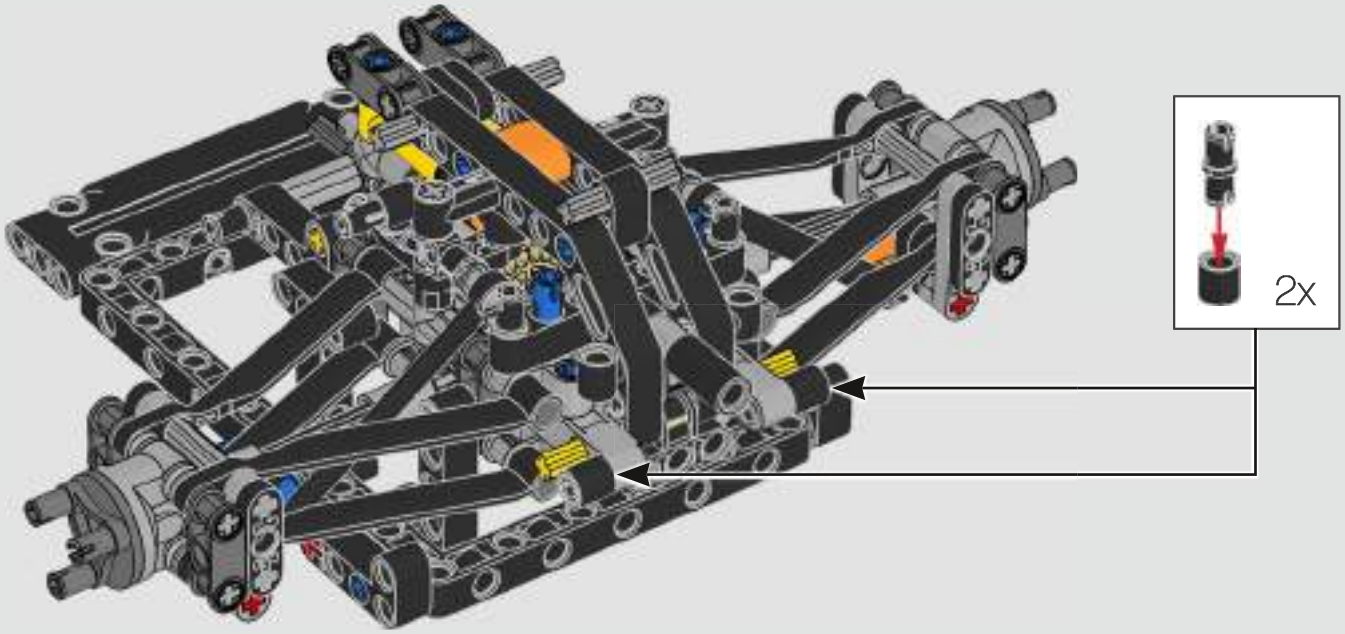

2x

46

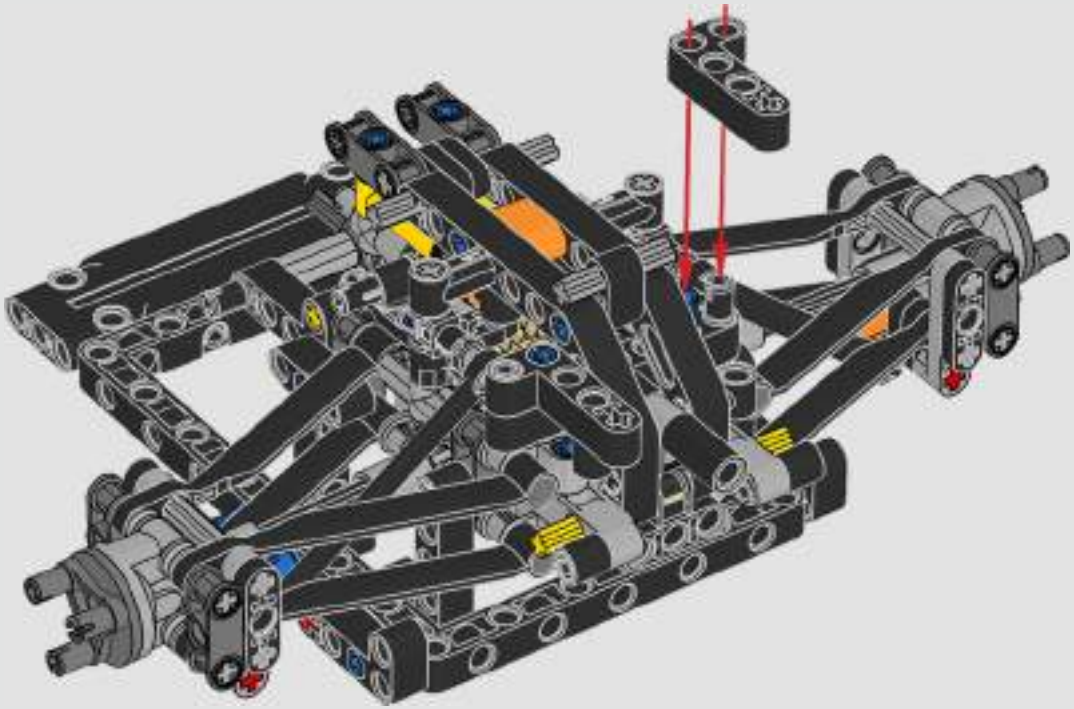

2x

47

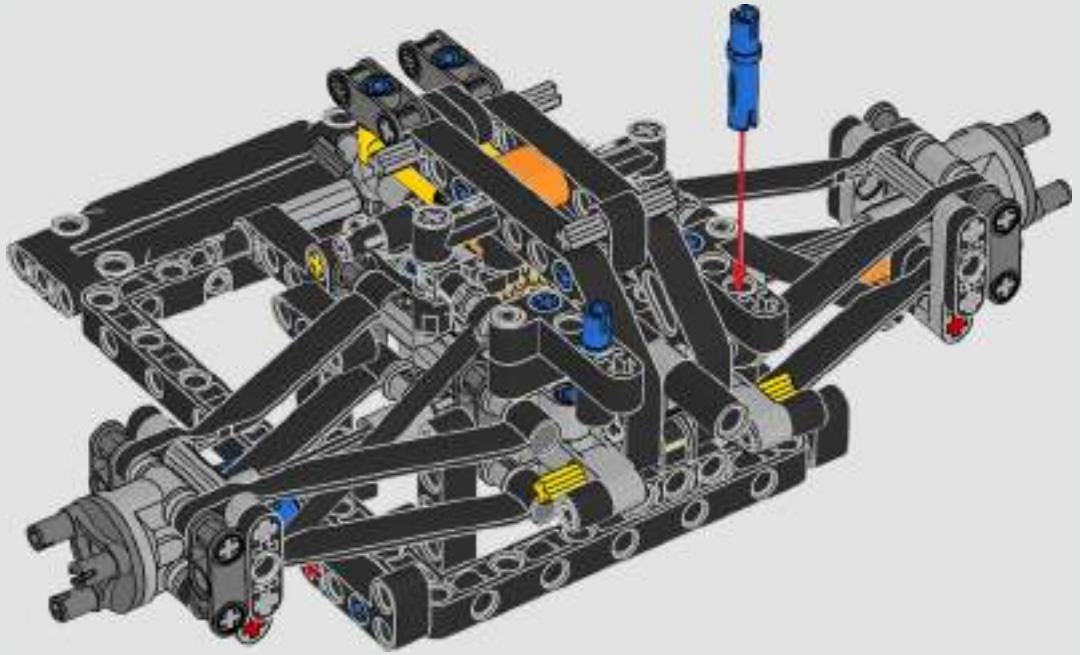

48

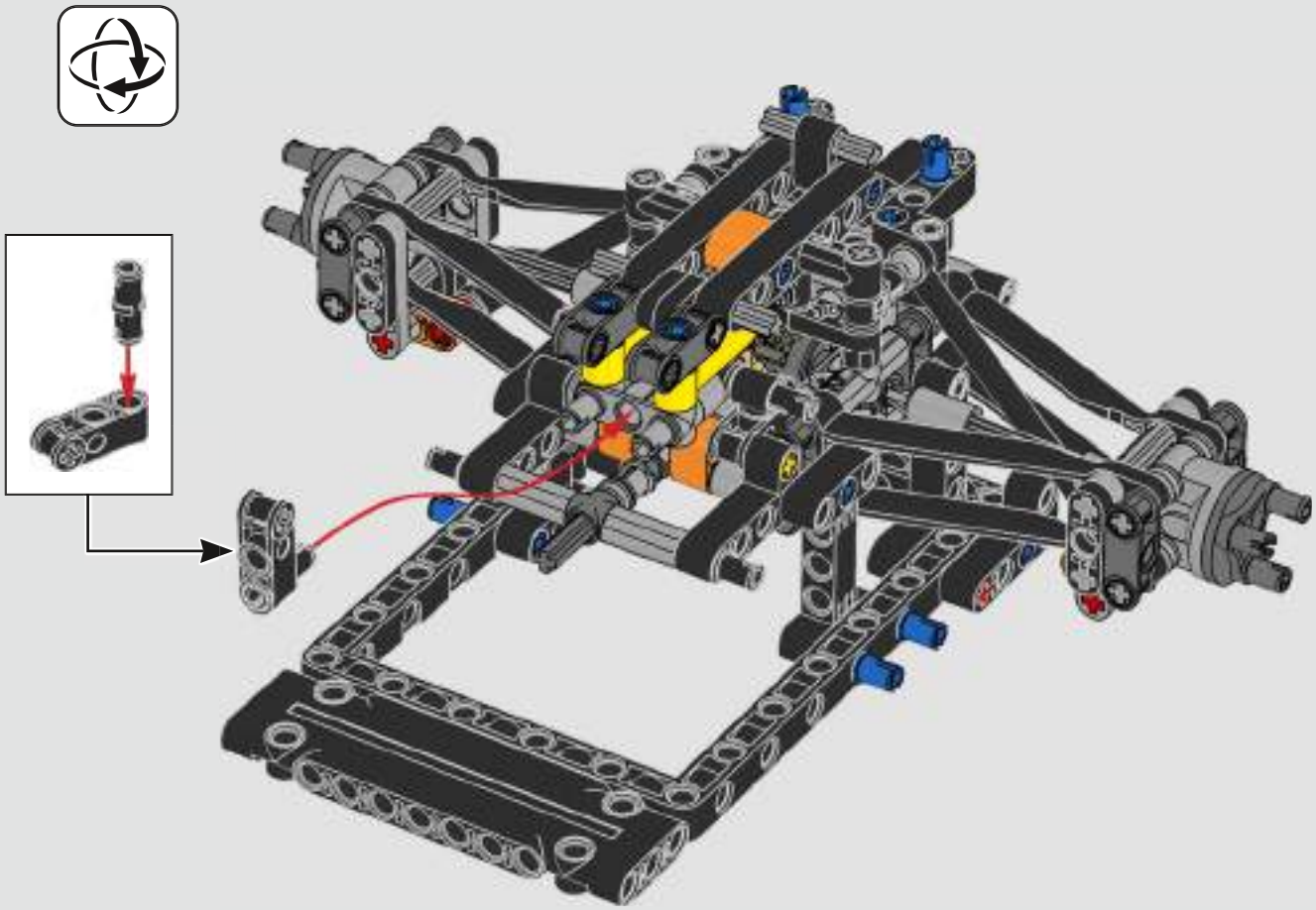

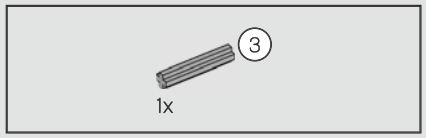

49

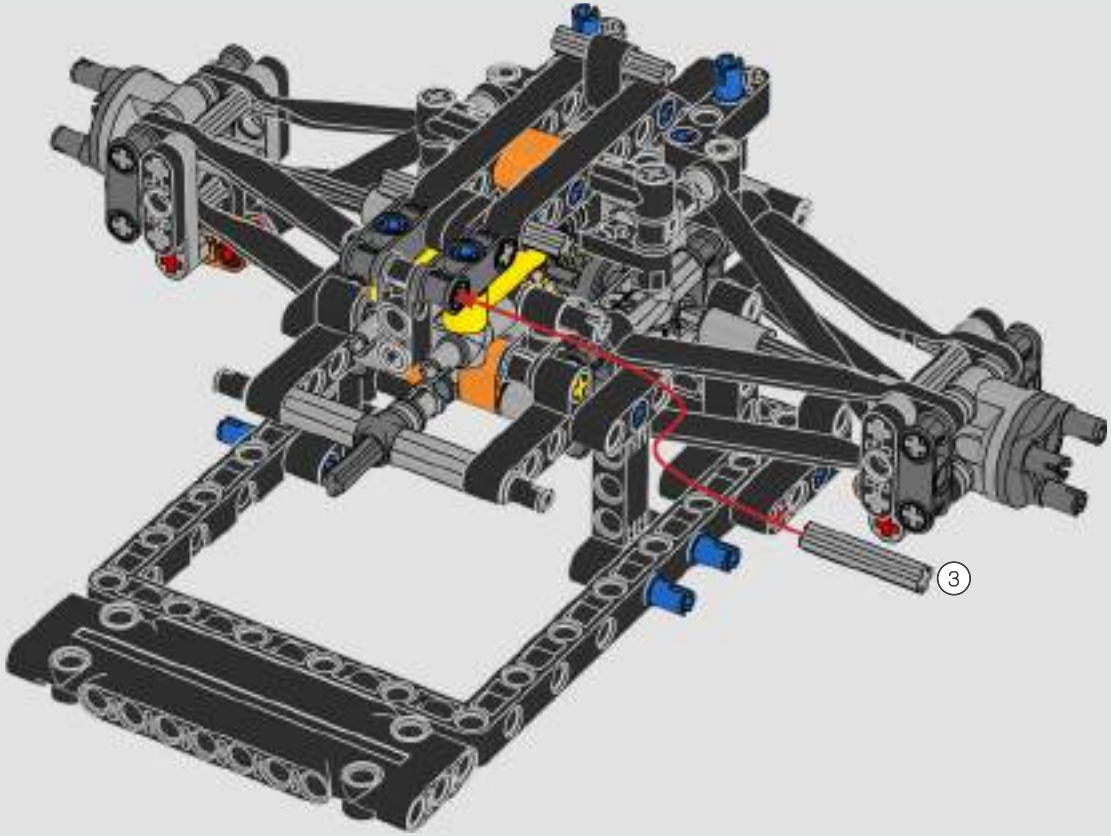

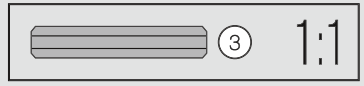

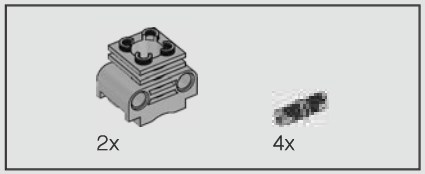

50

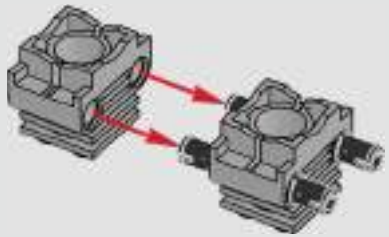

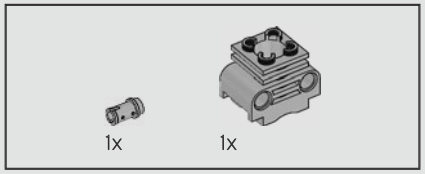

51

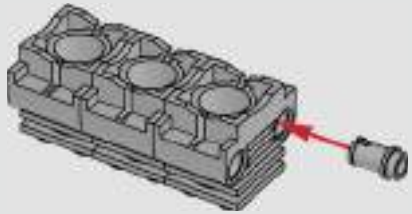

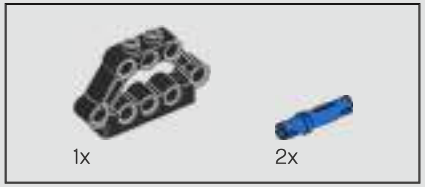

52

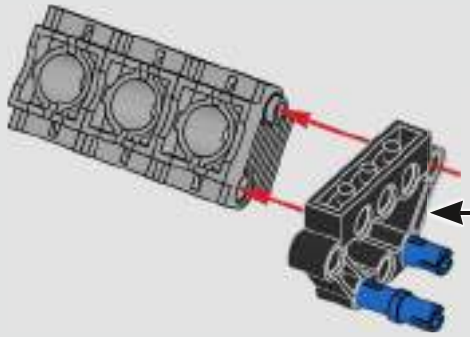

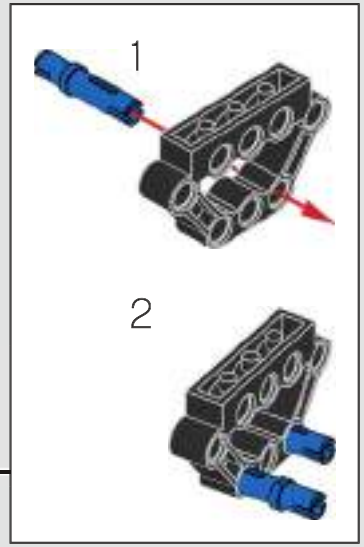

53

1

2

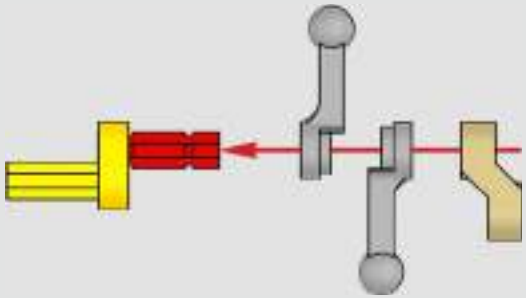

3

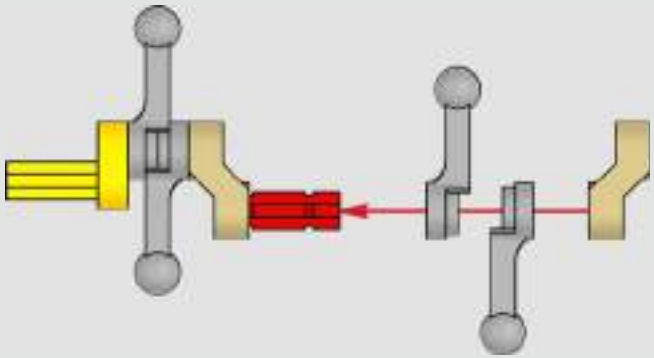

4

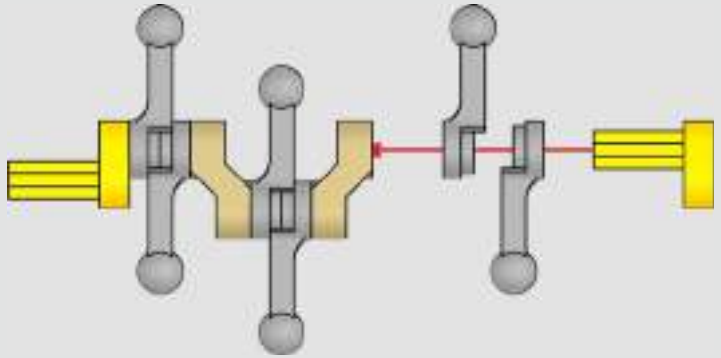

5

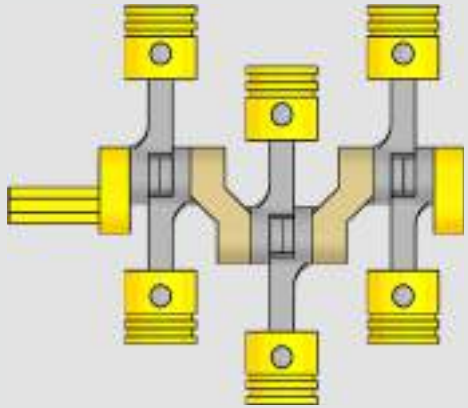

1:1

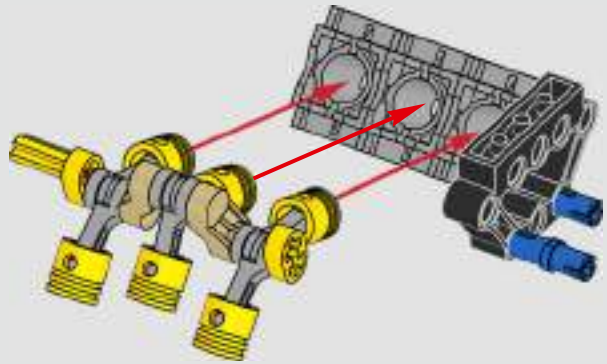

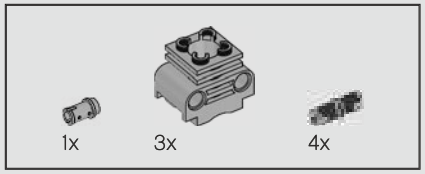

54

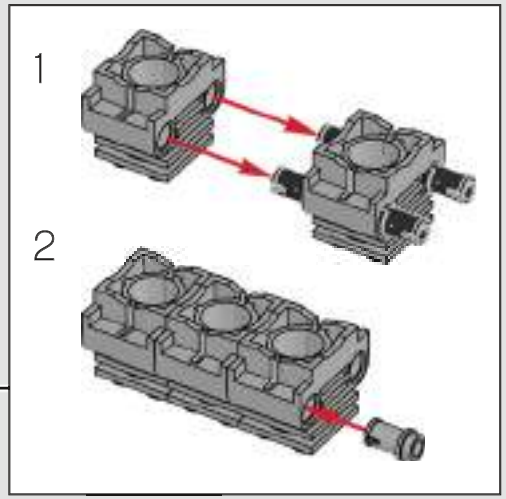

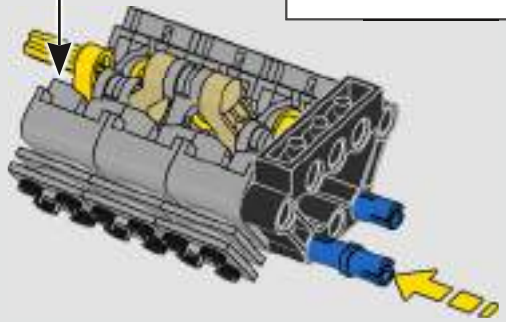

55

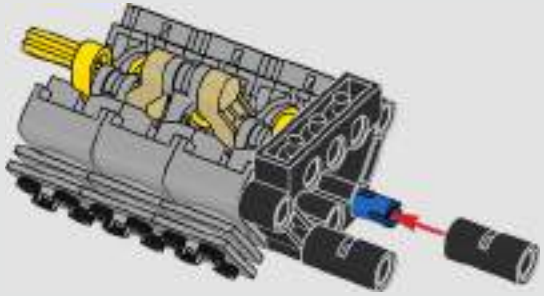

56

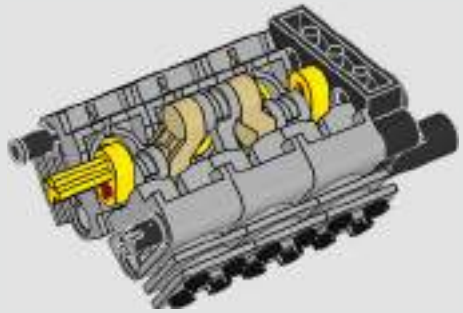

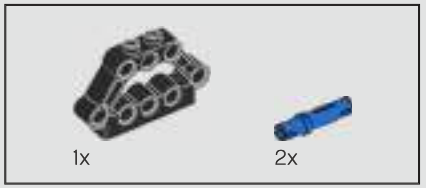

57

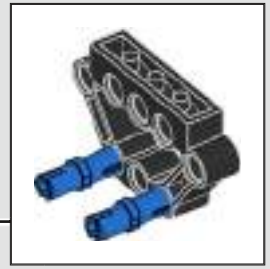

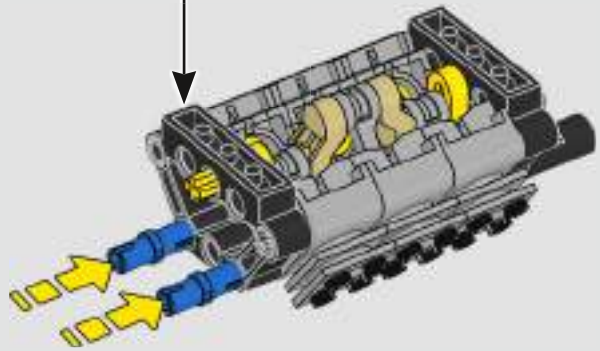

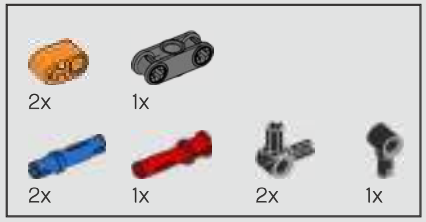

58

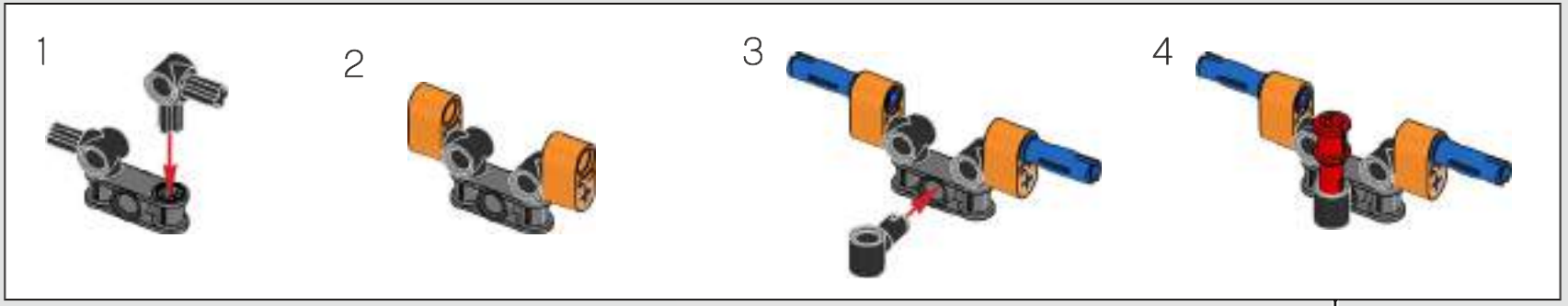

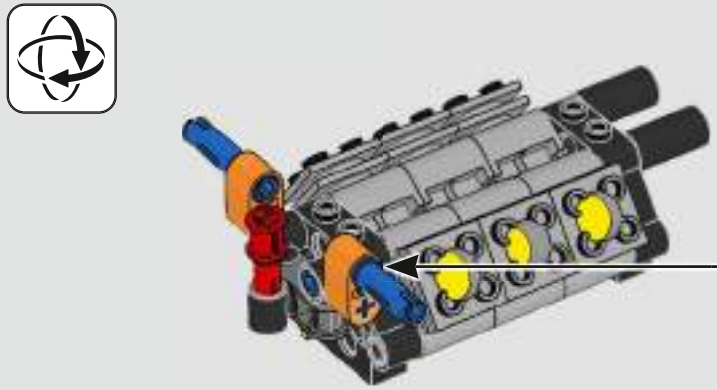

59

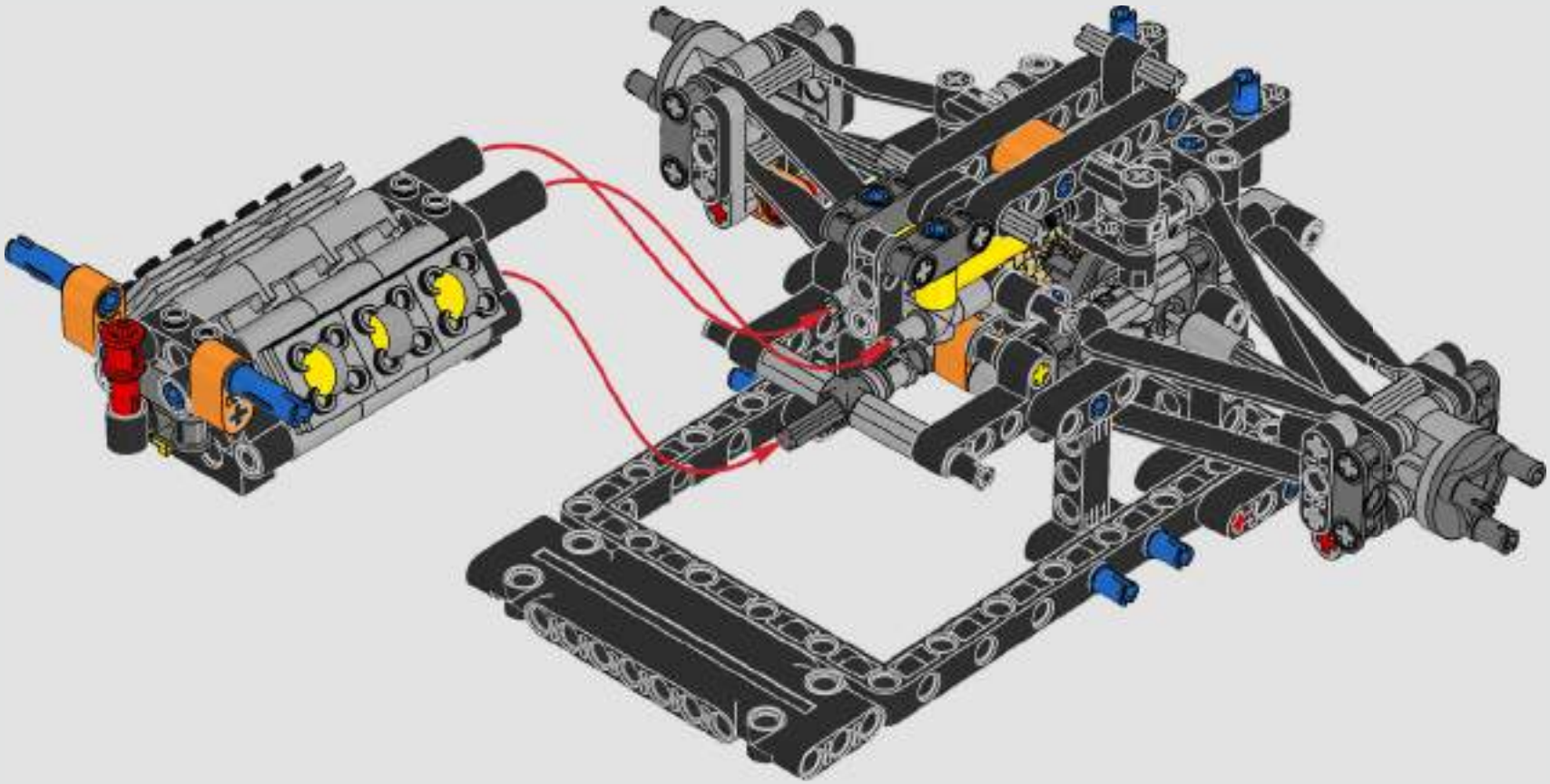

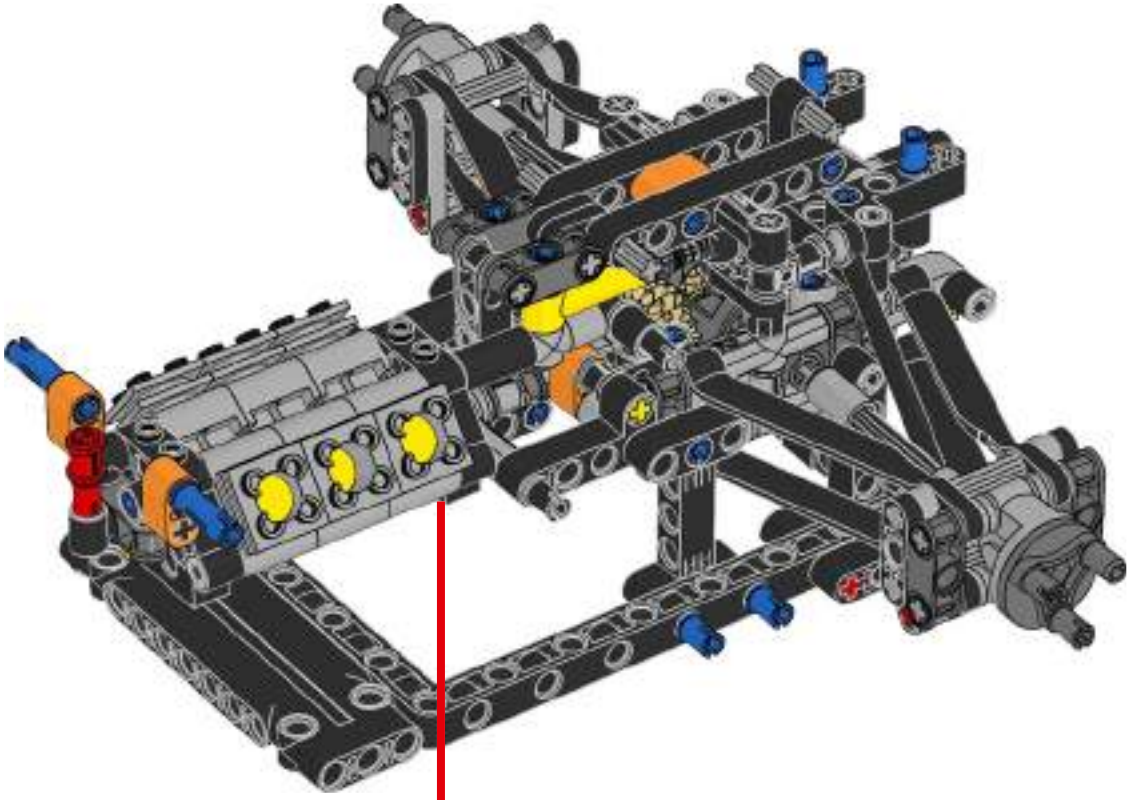

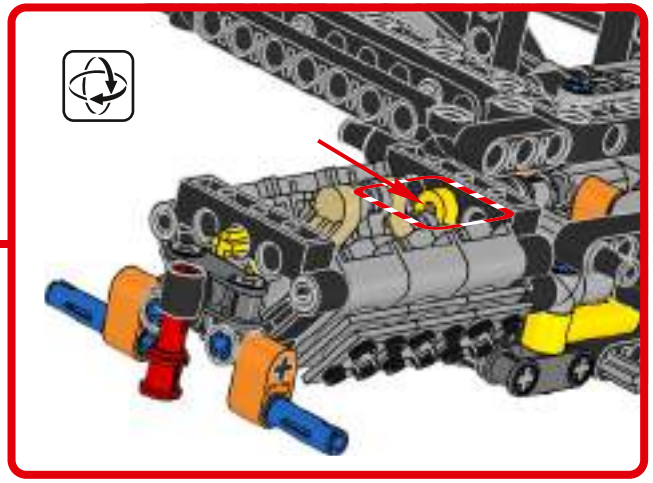

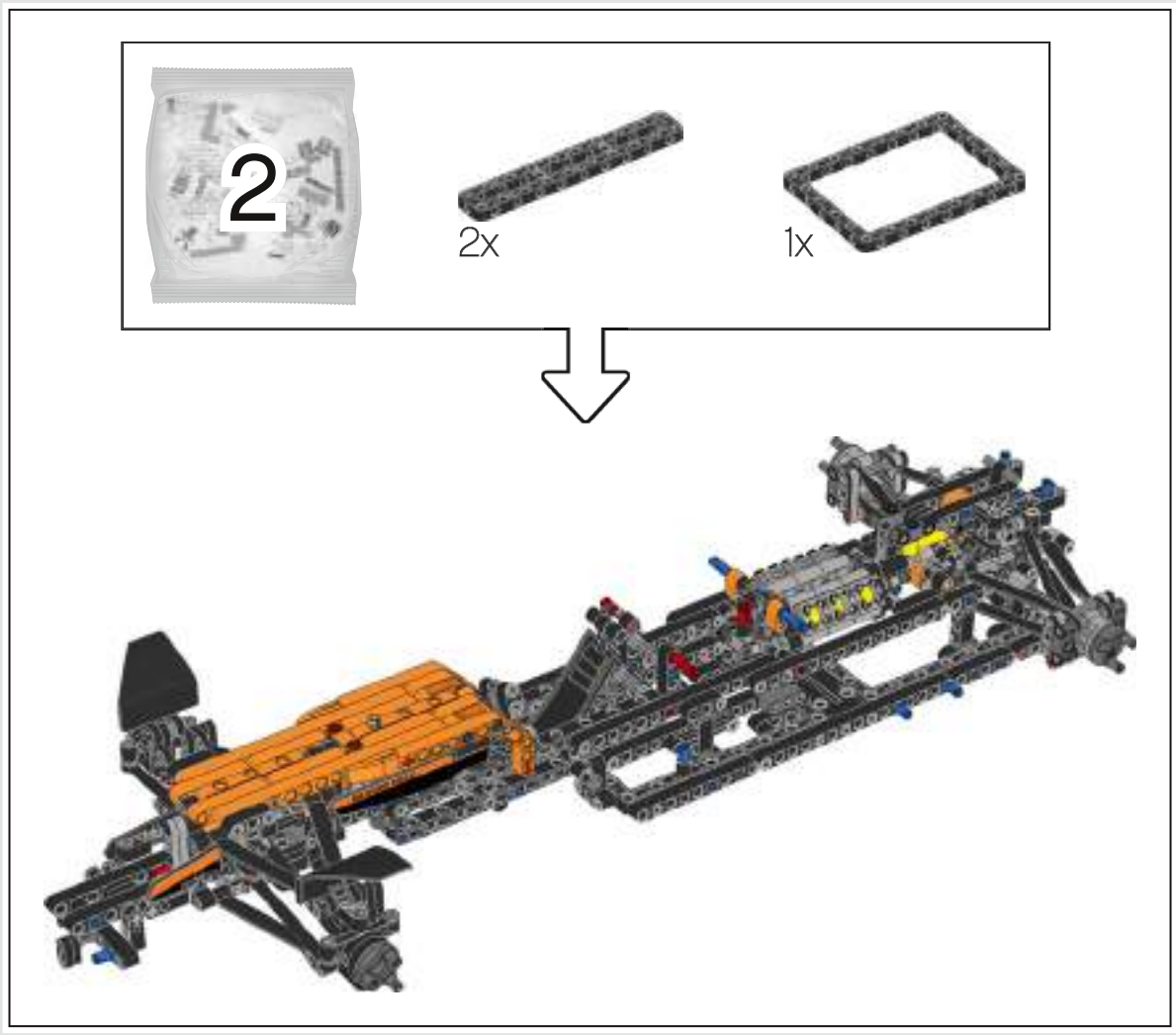
2
2x
1x

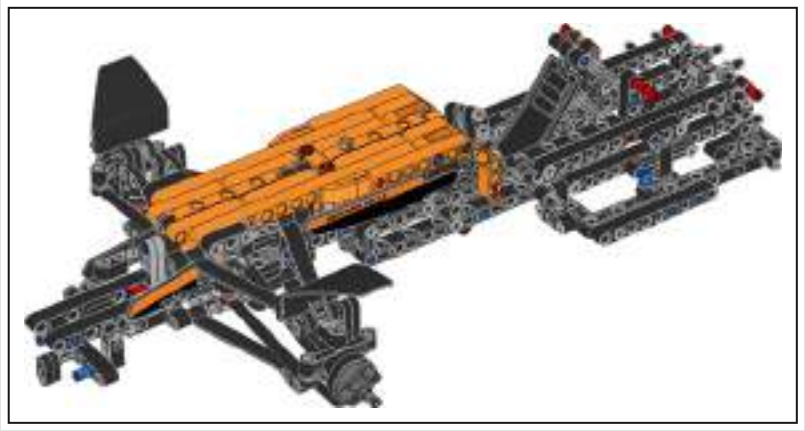

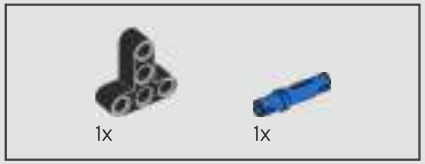

60

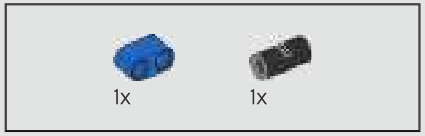

61

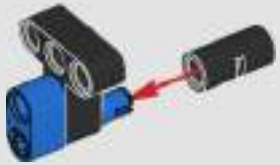

62

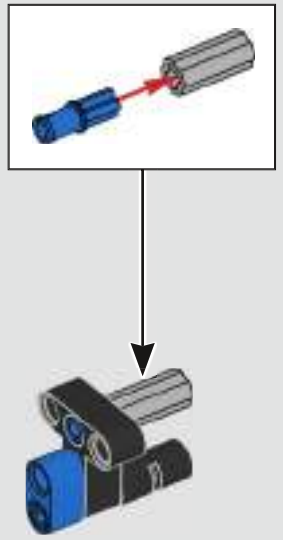

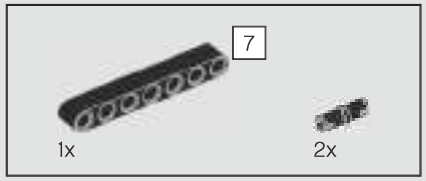

63

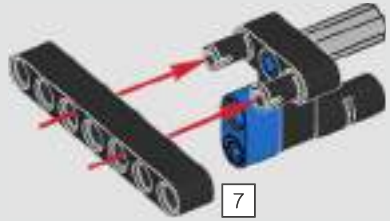

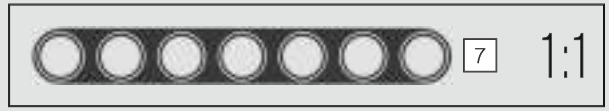

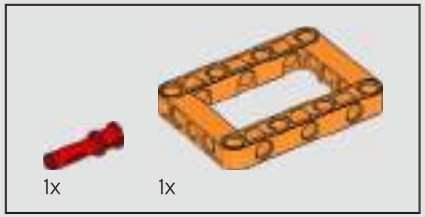

64

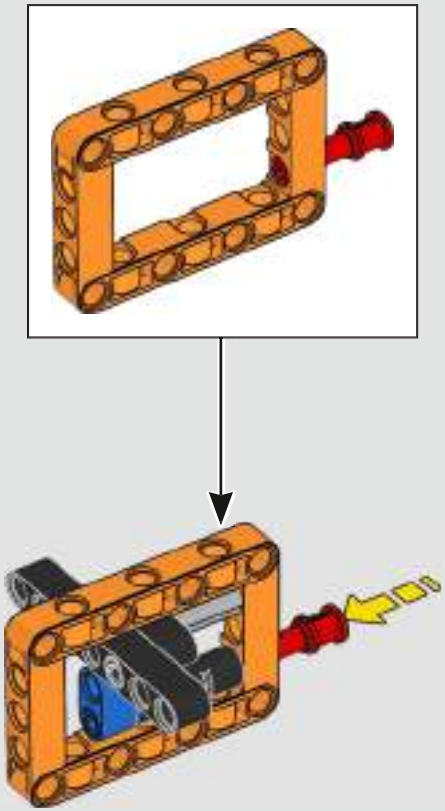

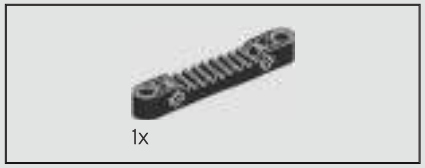

65

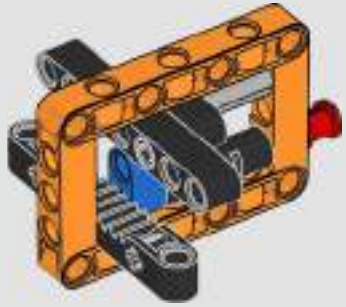

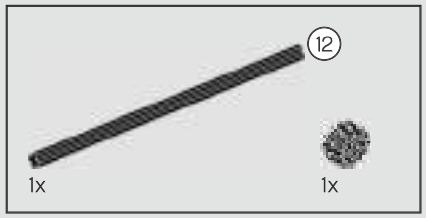

66

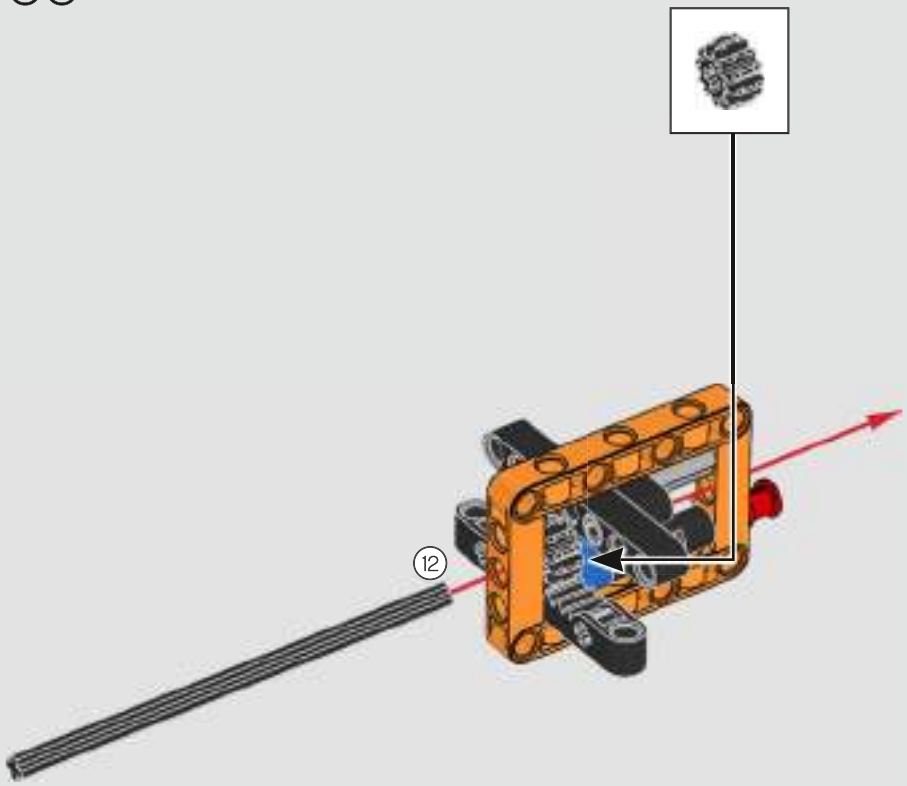

67

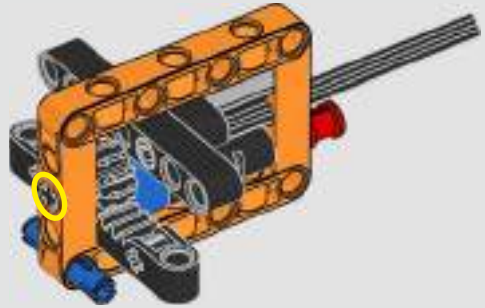

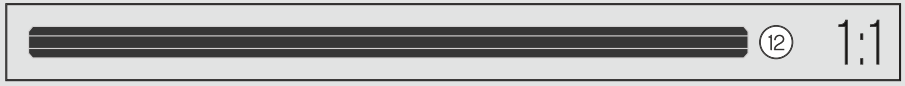

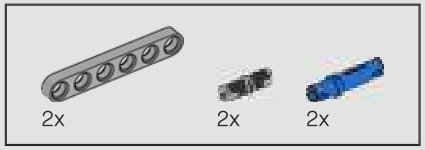

68

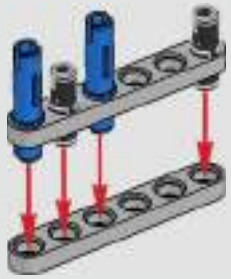

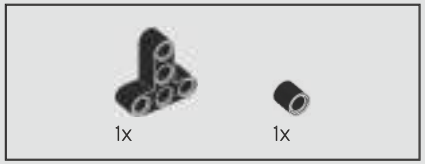

69

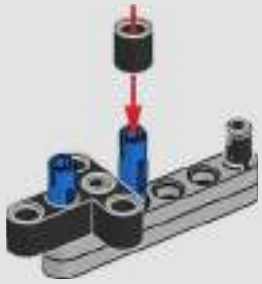

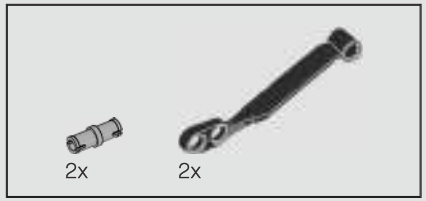

70

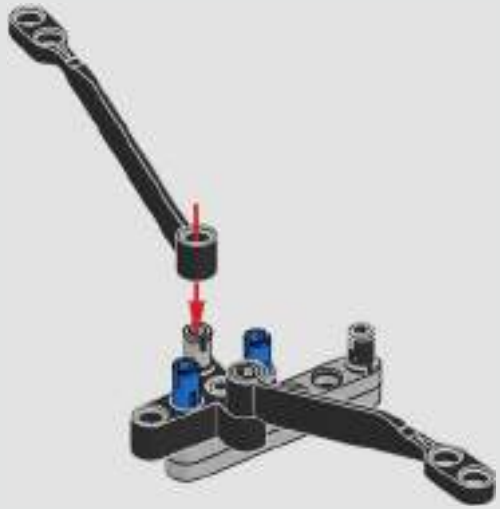

71

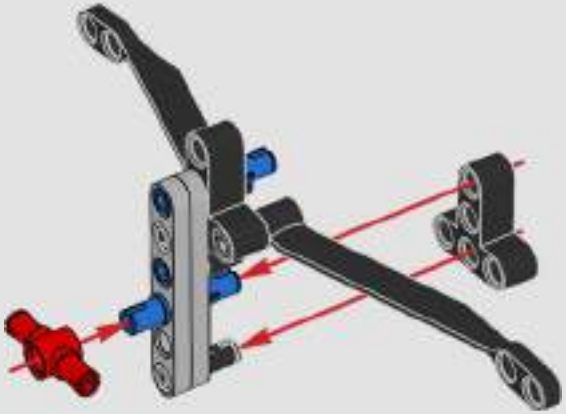

72

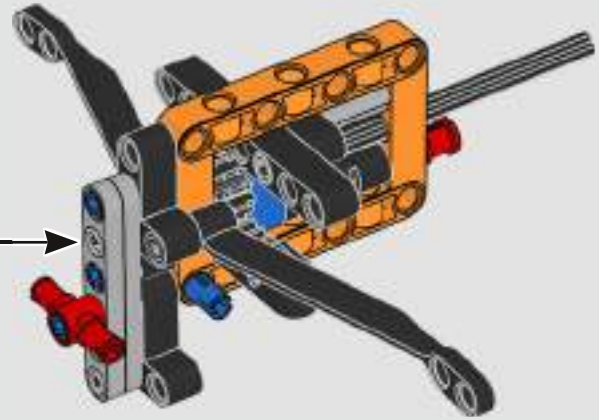

73

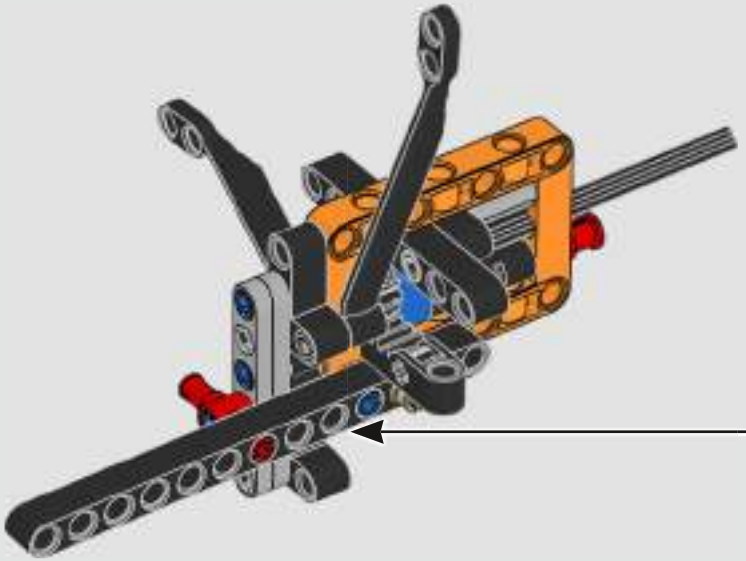

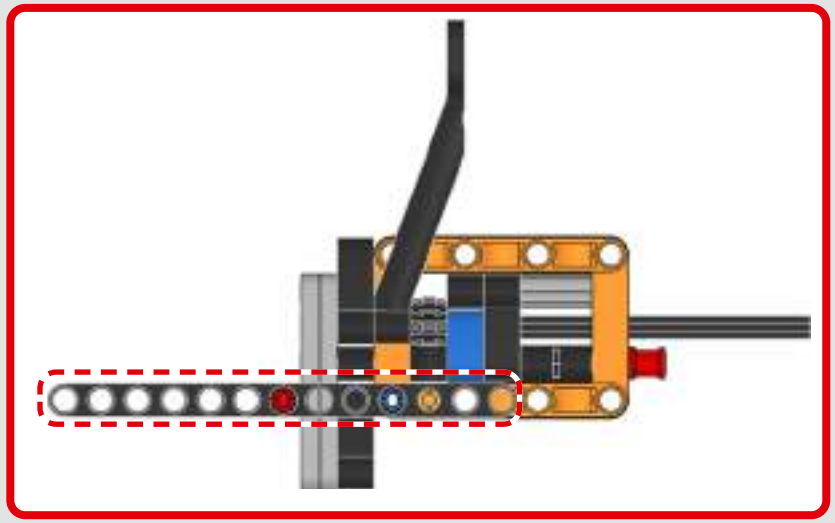

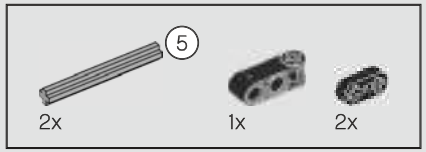

74

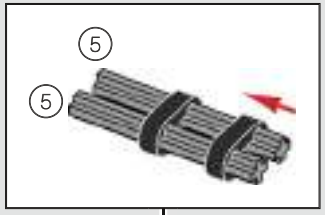

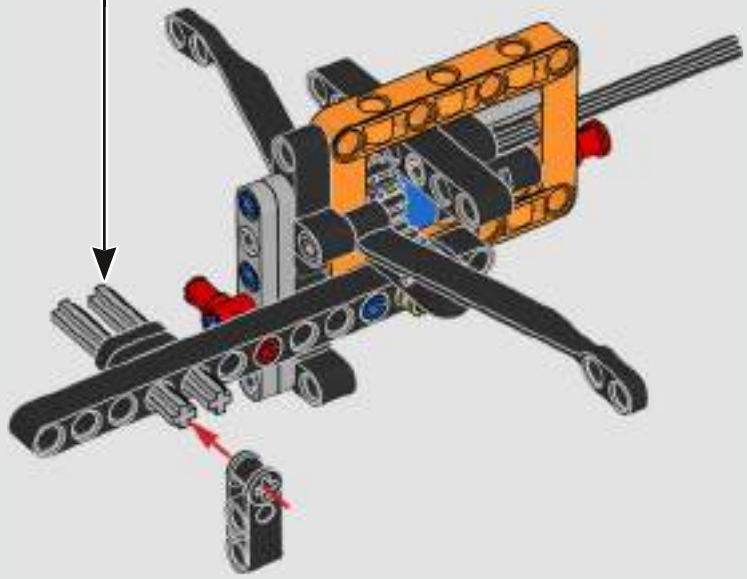

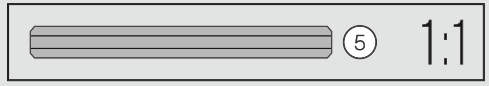

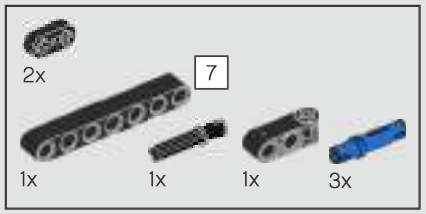

75

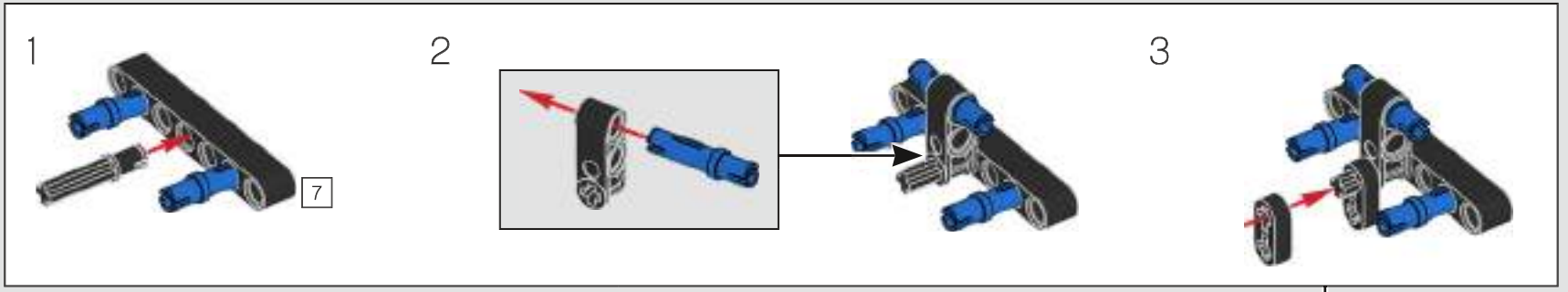

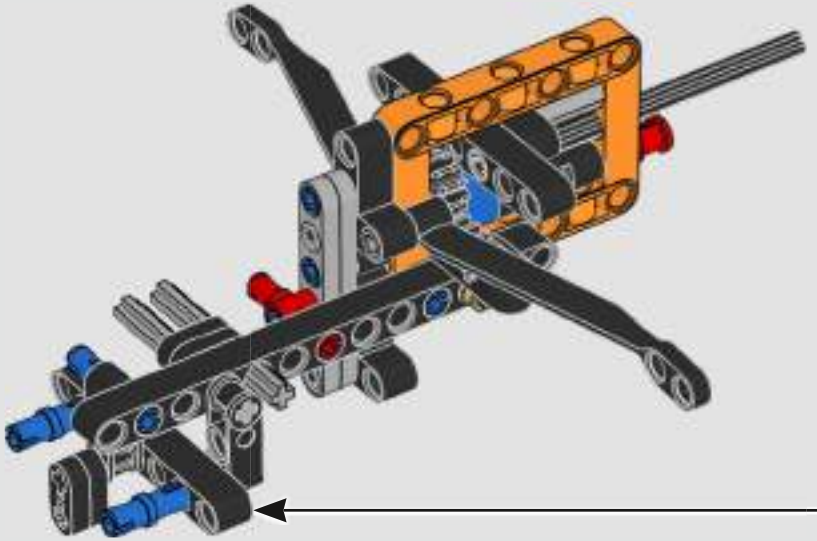

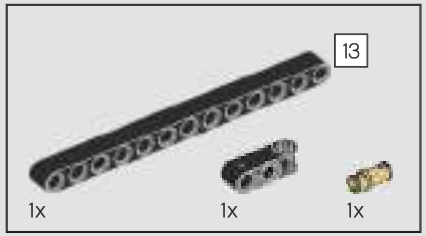

76

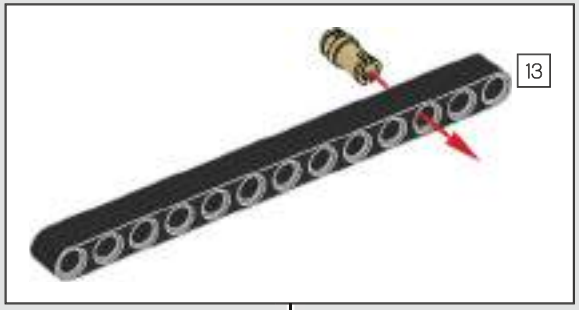

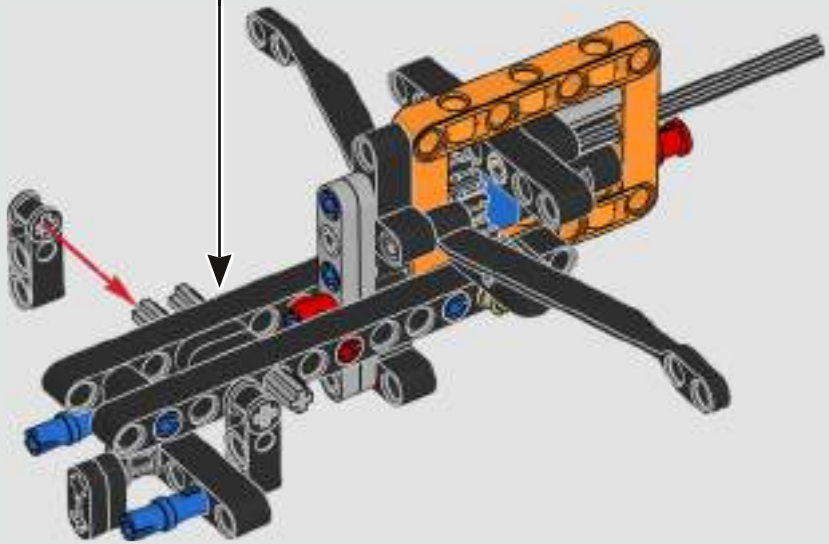

77

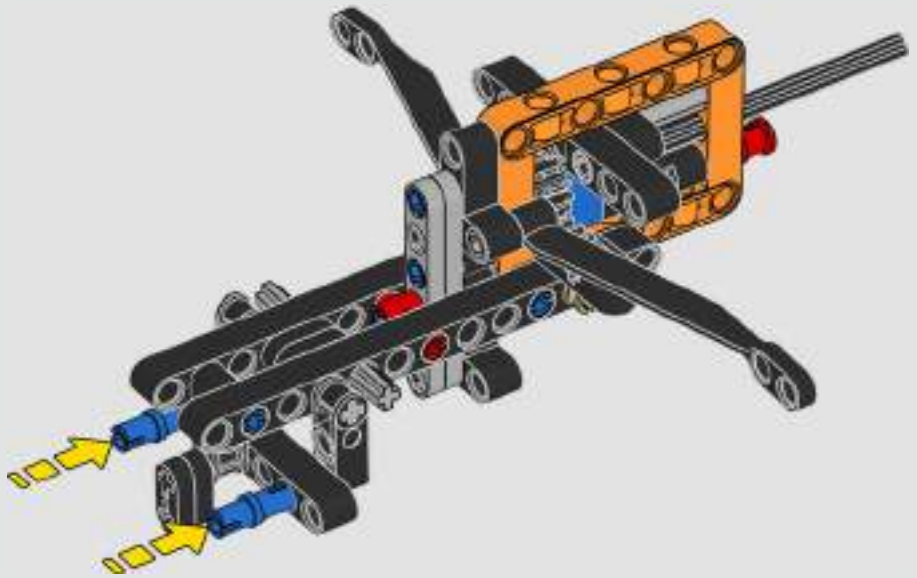

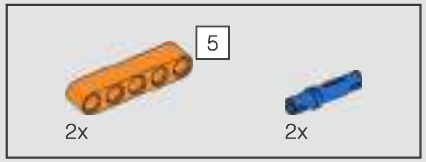

78

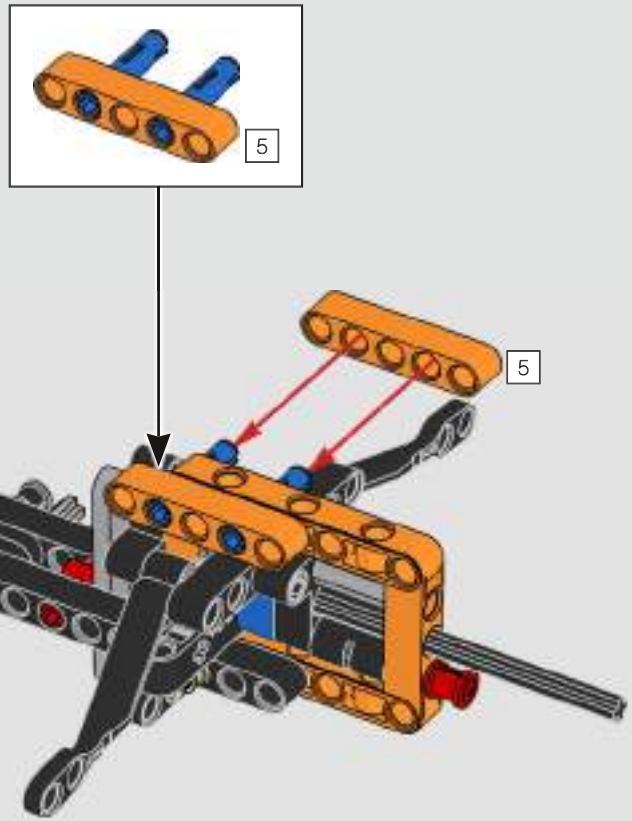

79

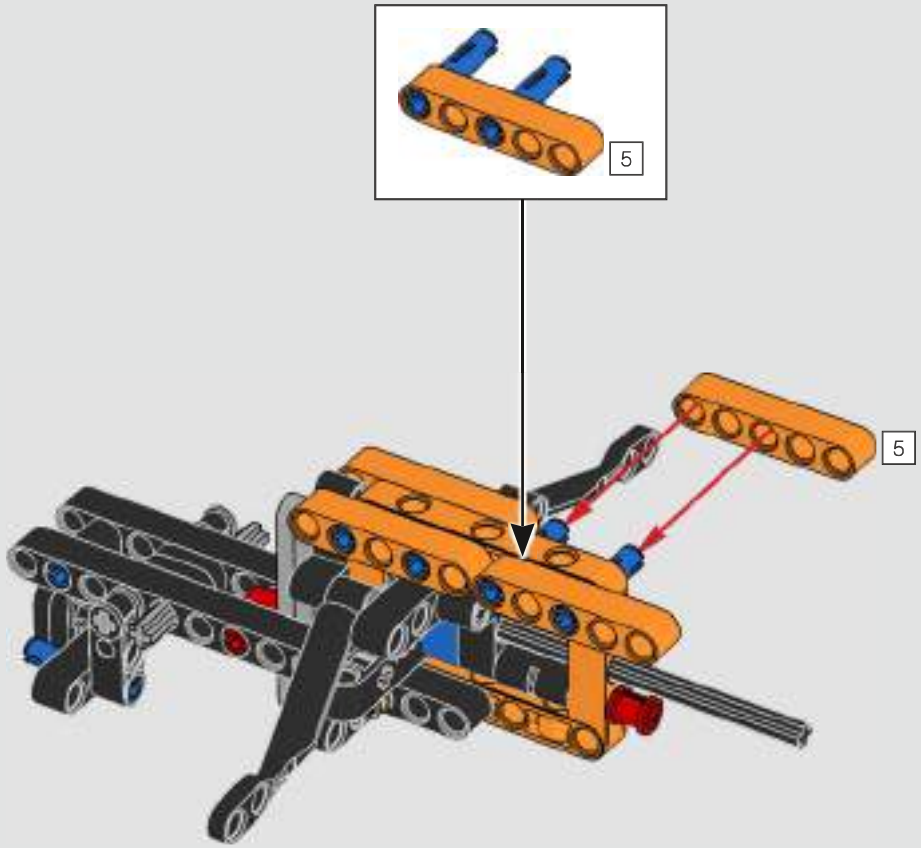

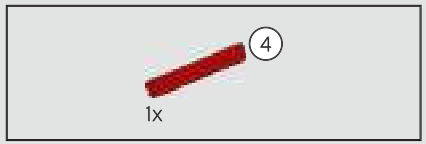

80

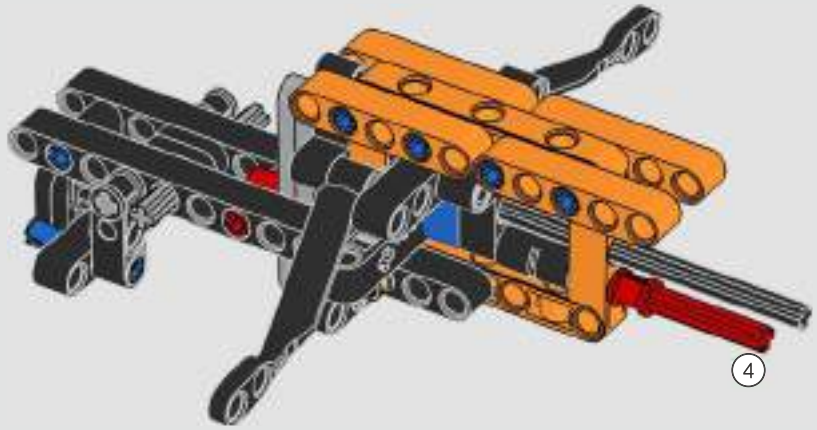

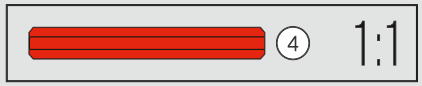

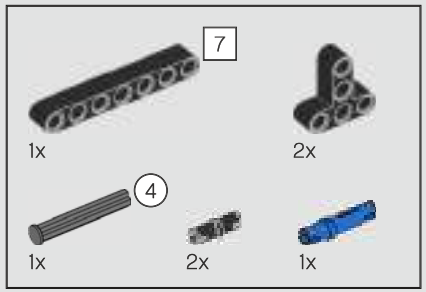

81

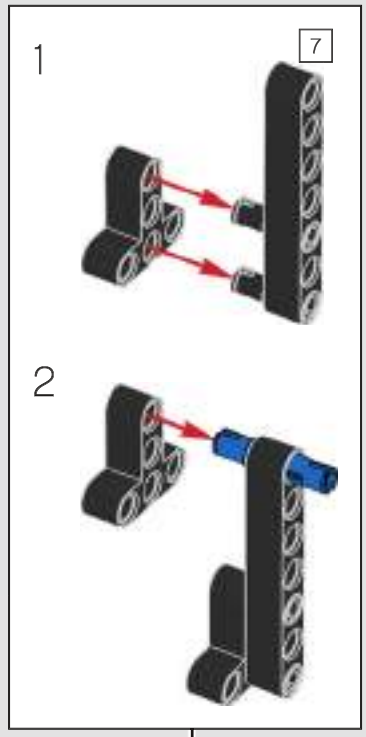

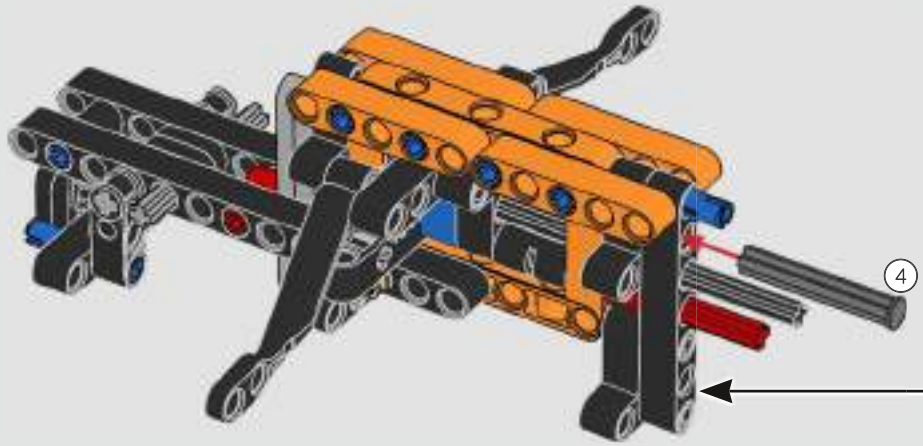

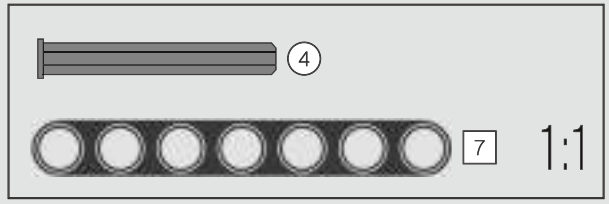

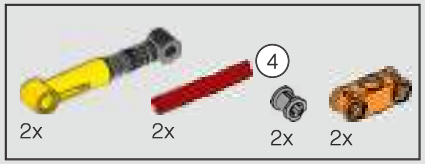

82

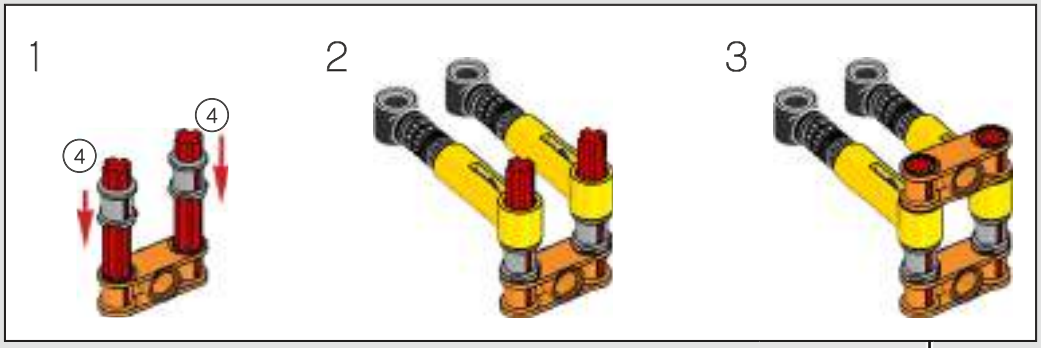

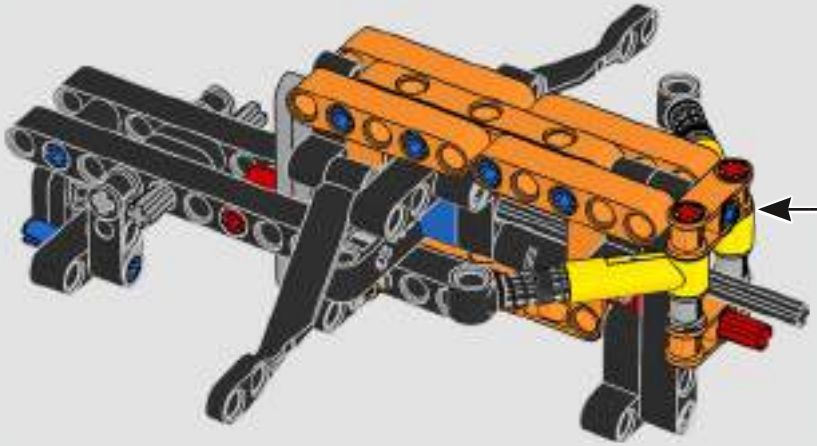

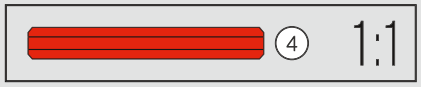

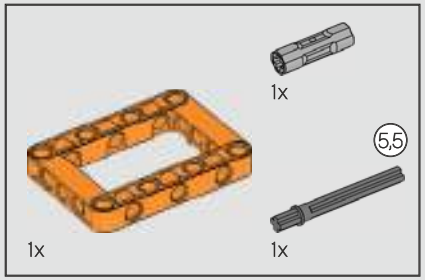

83

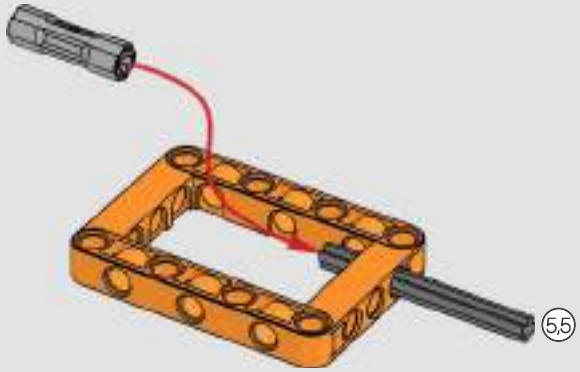

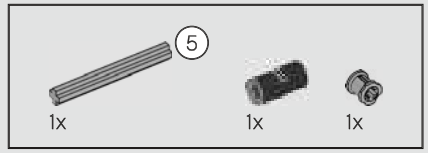

84

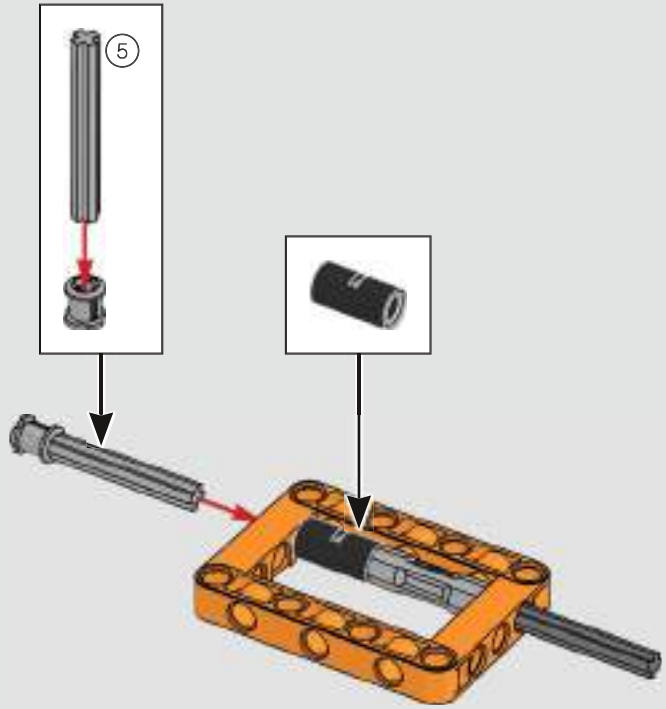

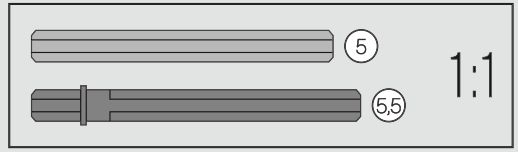

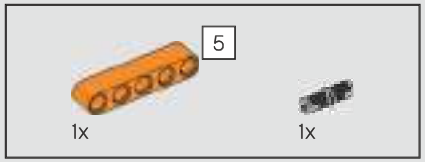

85

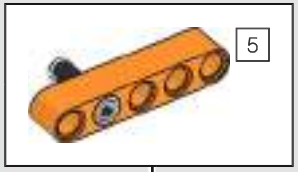

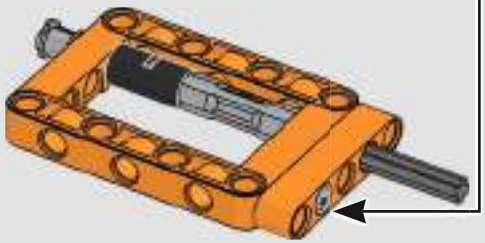

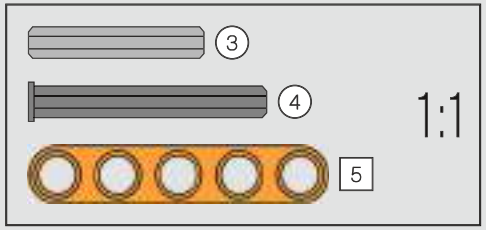

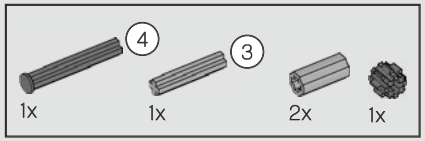

86

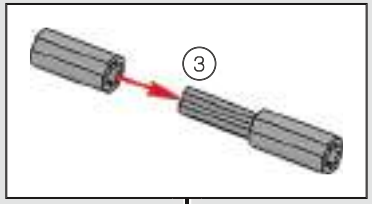

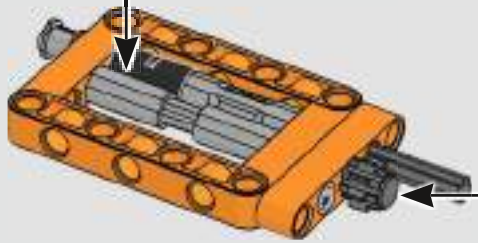

87

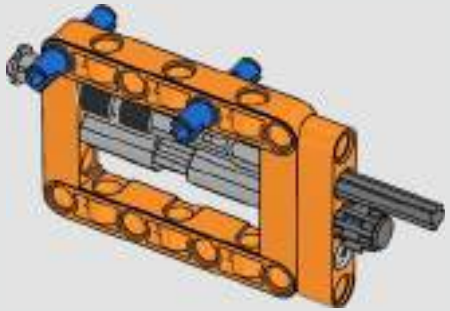

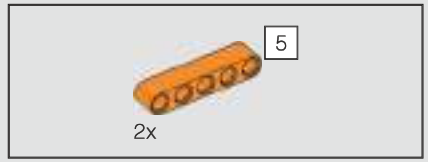

88

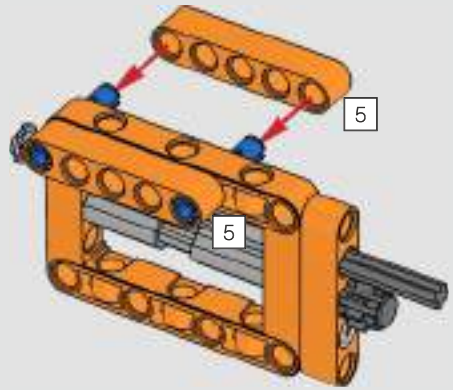

89

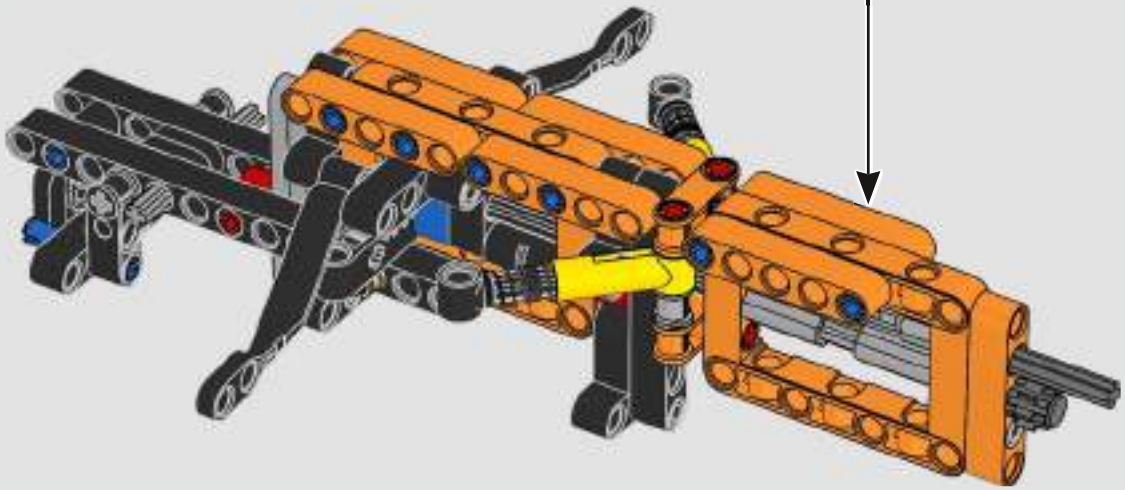

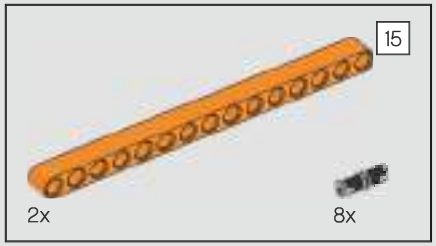

90

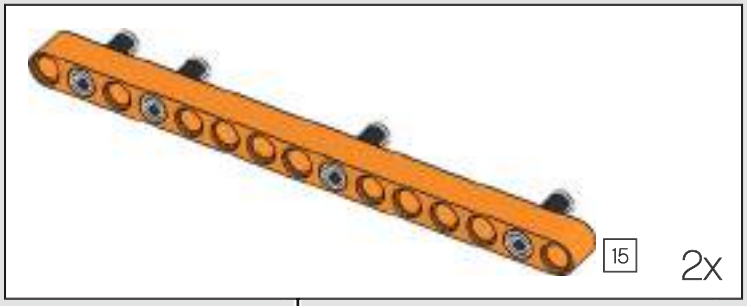

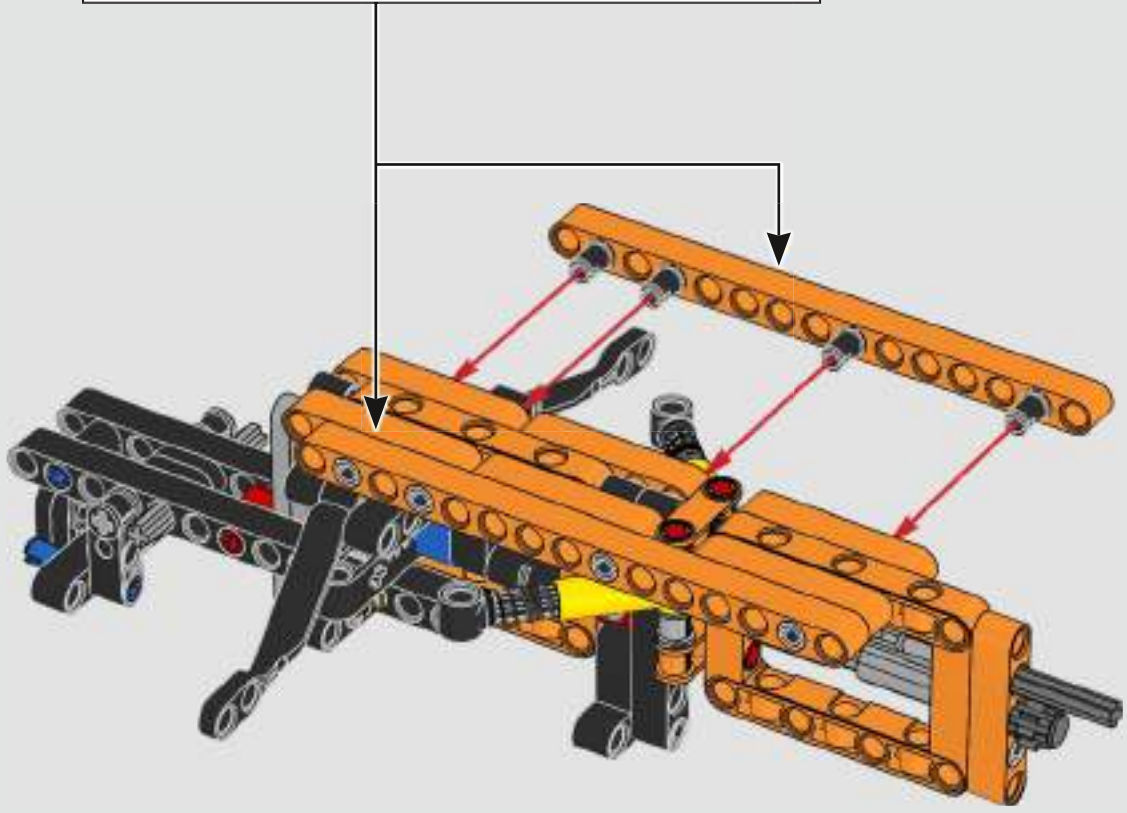

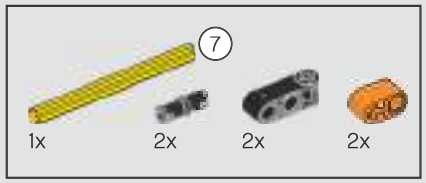

91

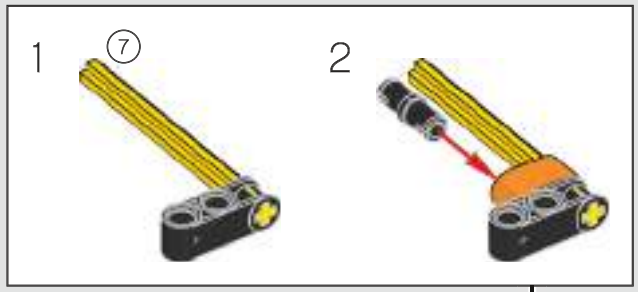

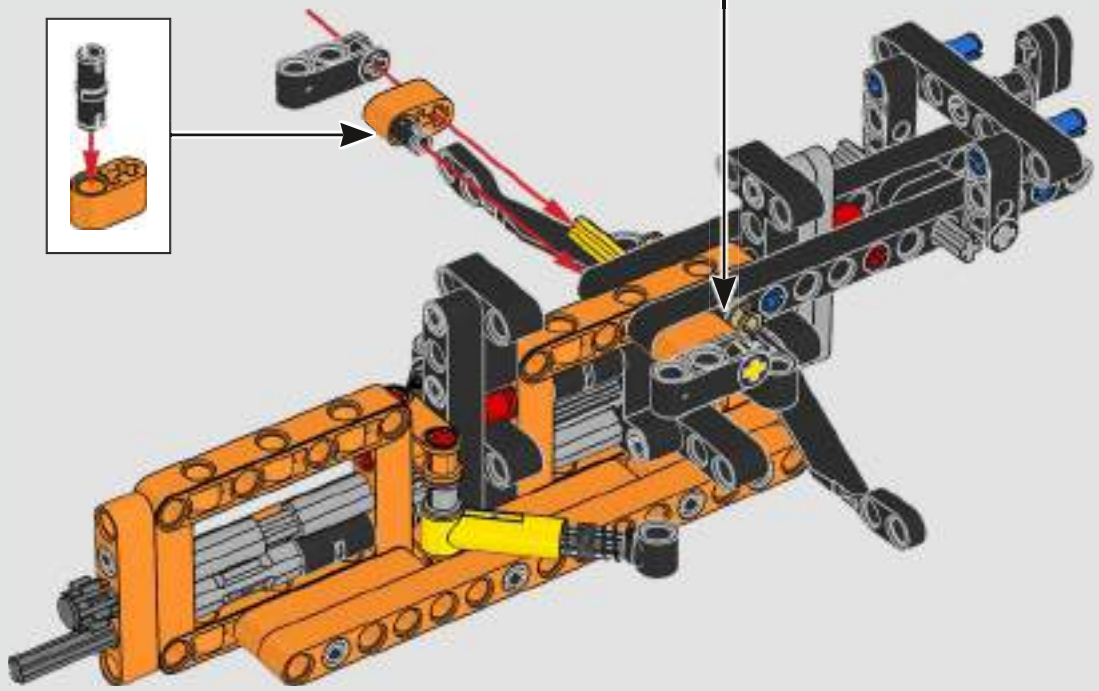

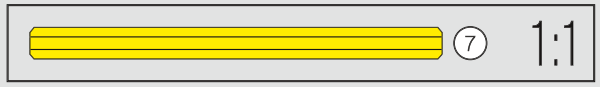

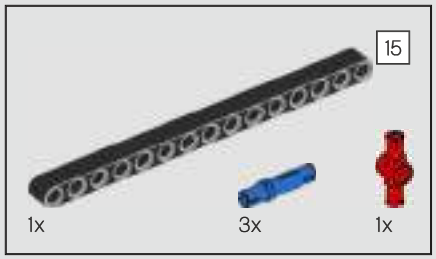

92

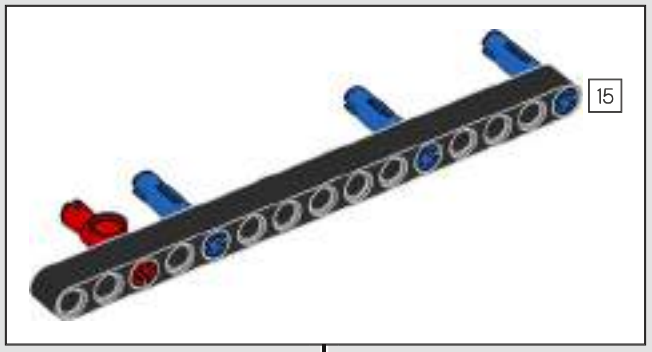

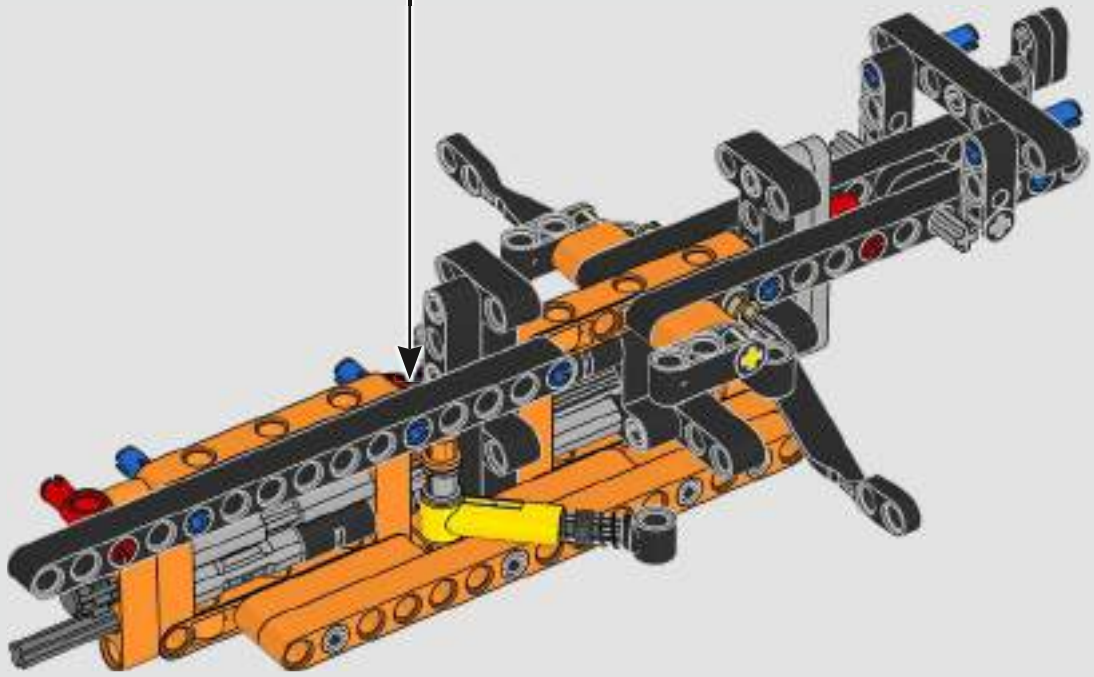

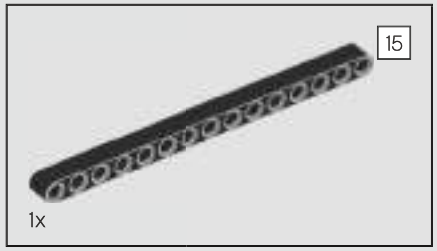

93

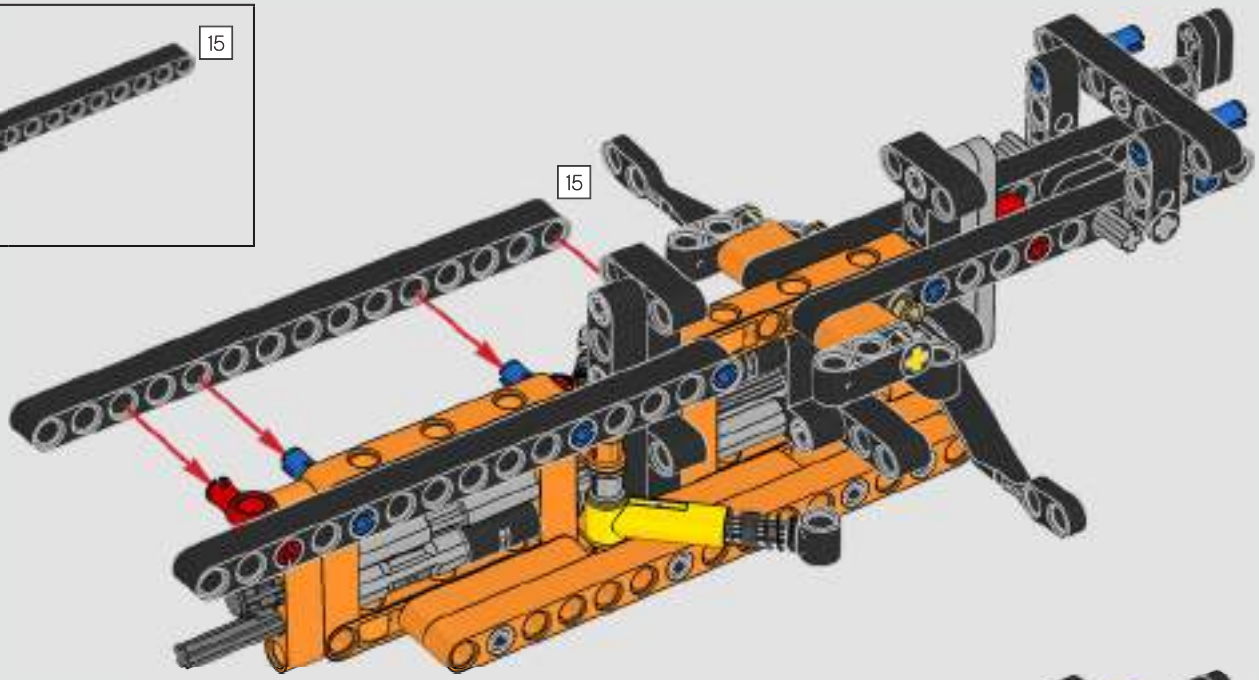

94

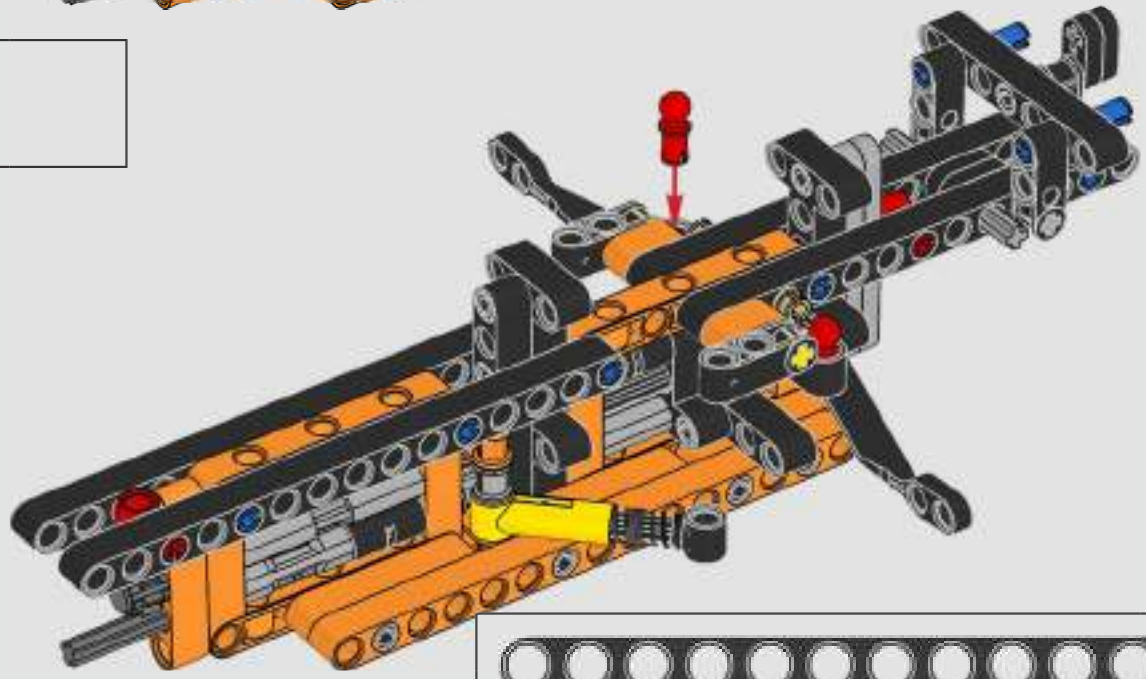

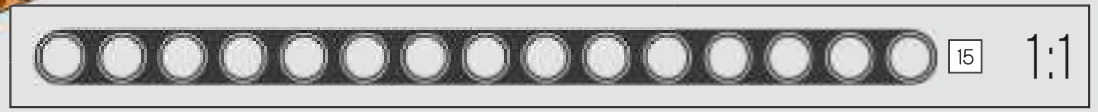

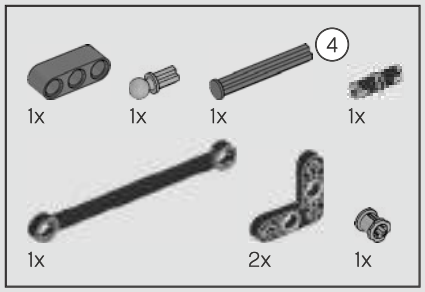

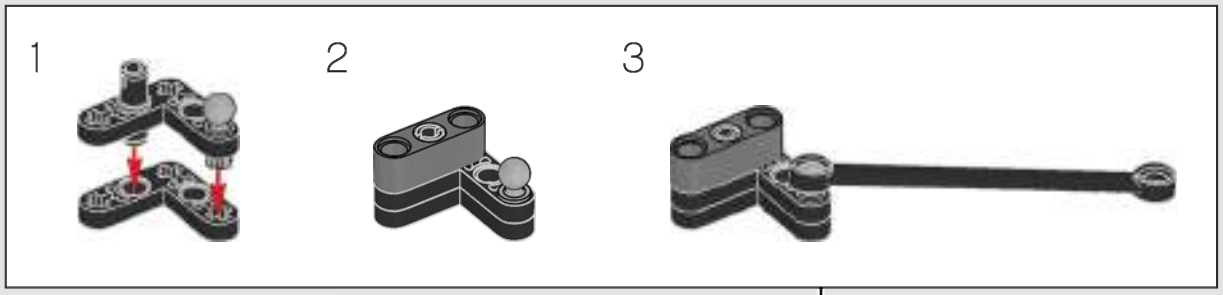

95

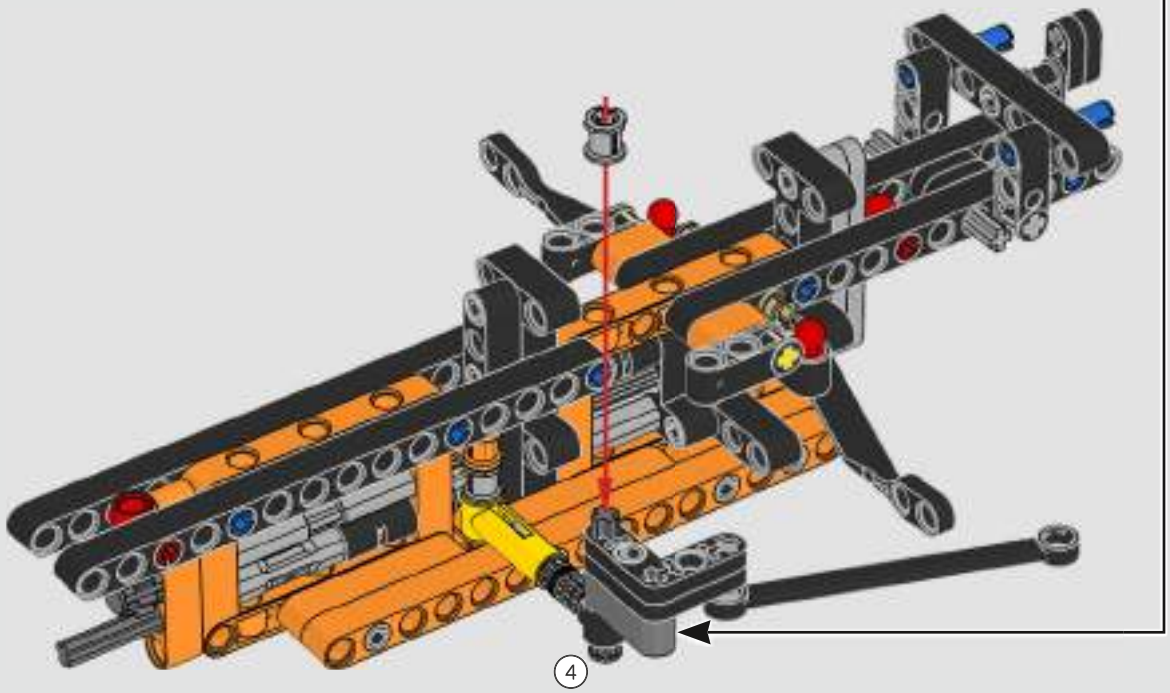

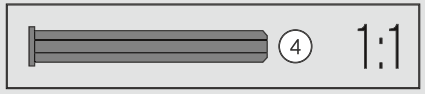

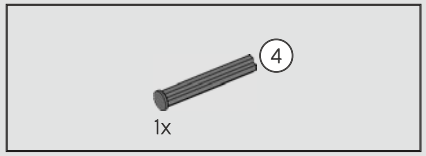

96

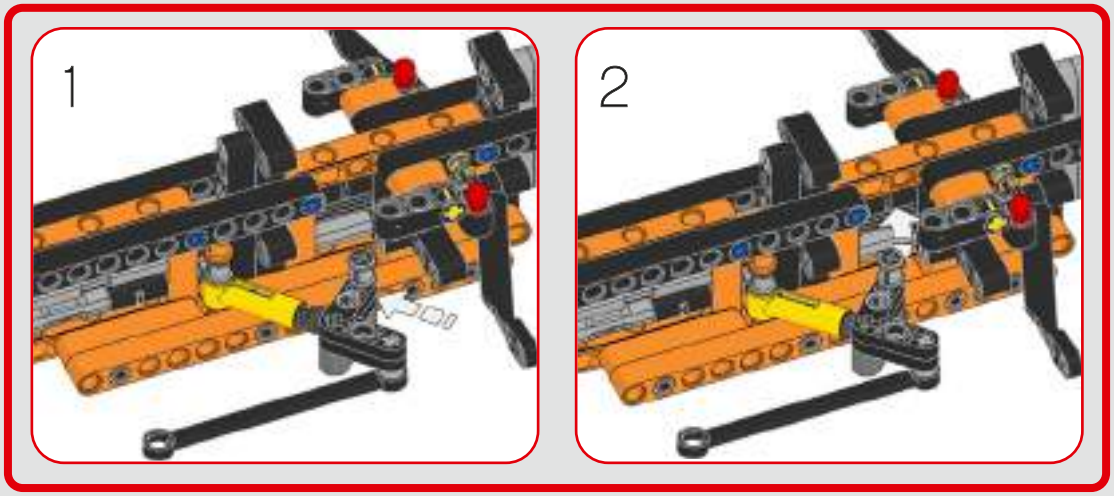

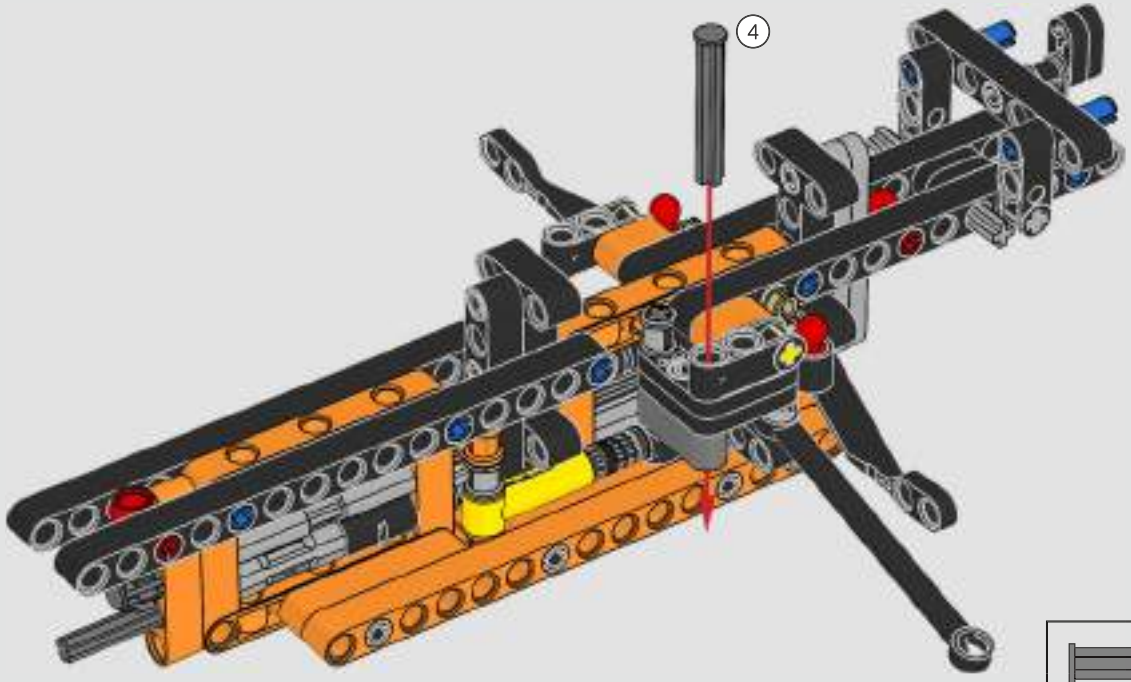

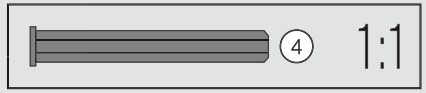

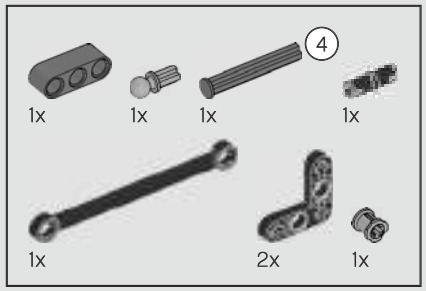

97

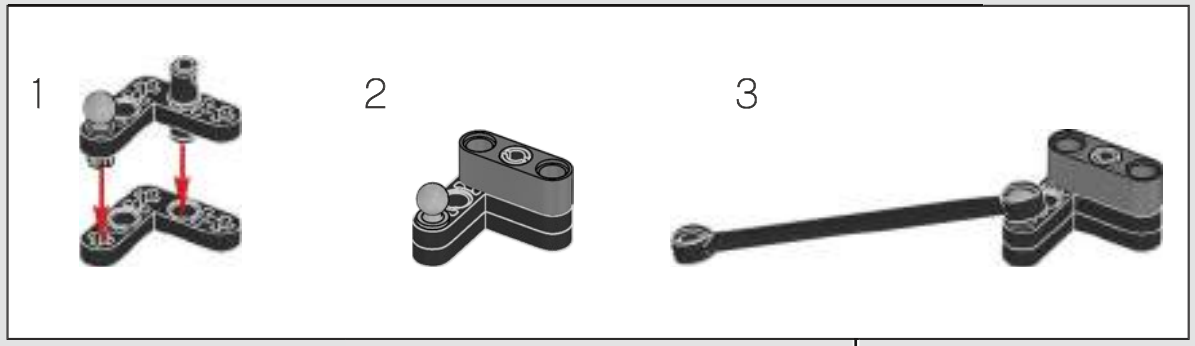

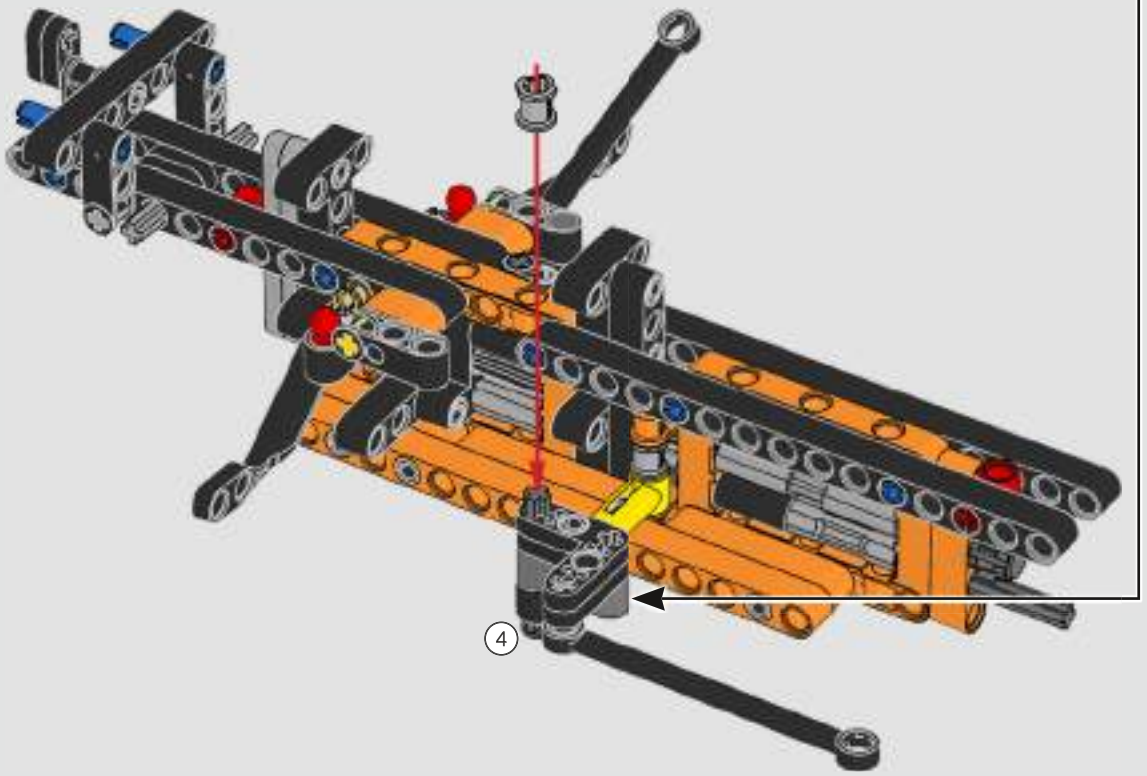

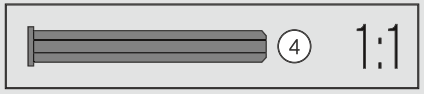

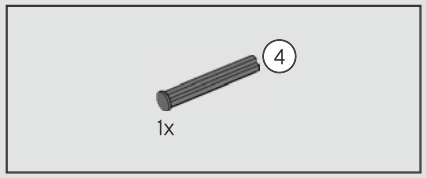

98

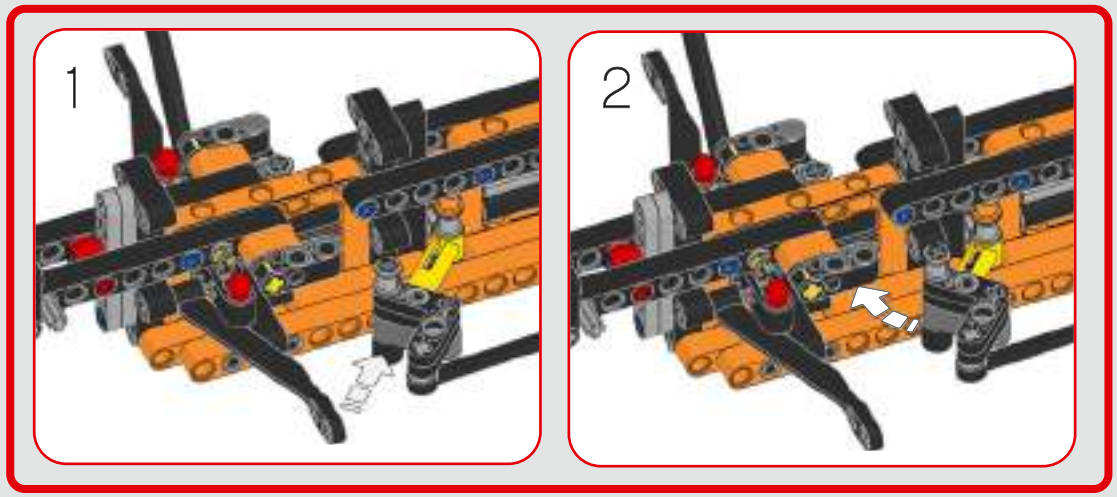

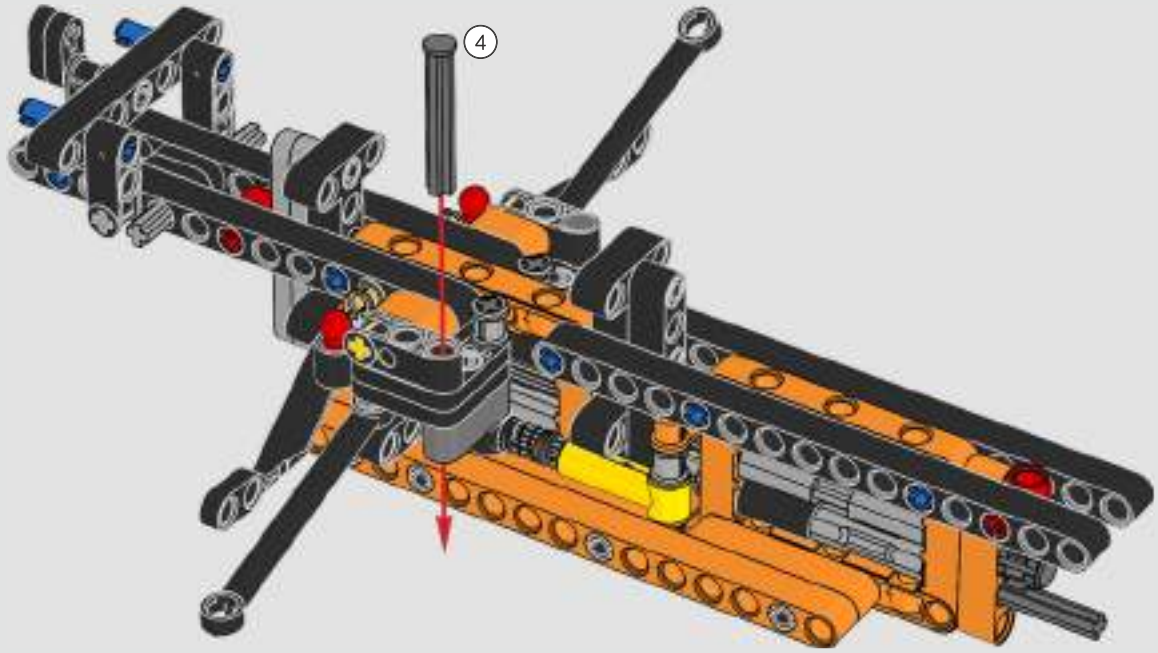

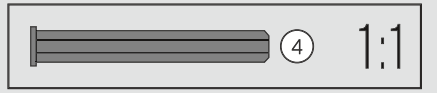

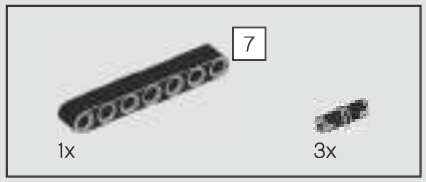

99

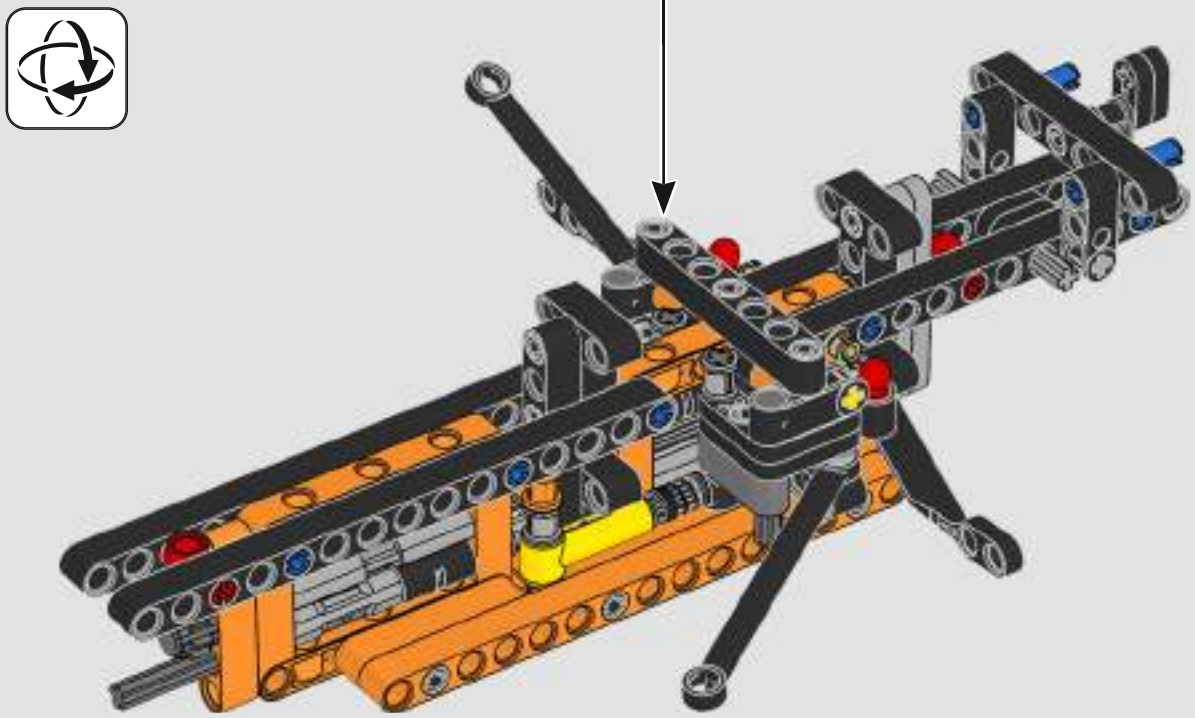

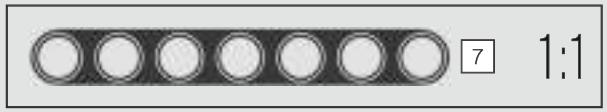

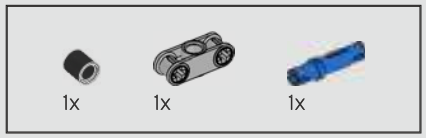

100

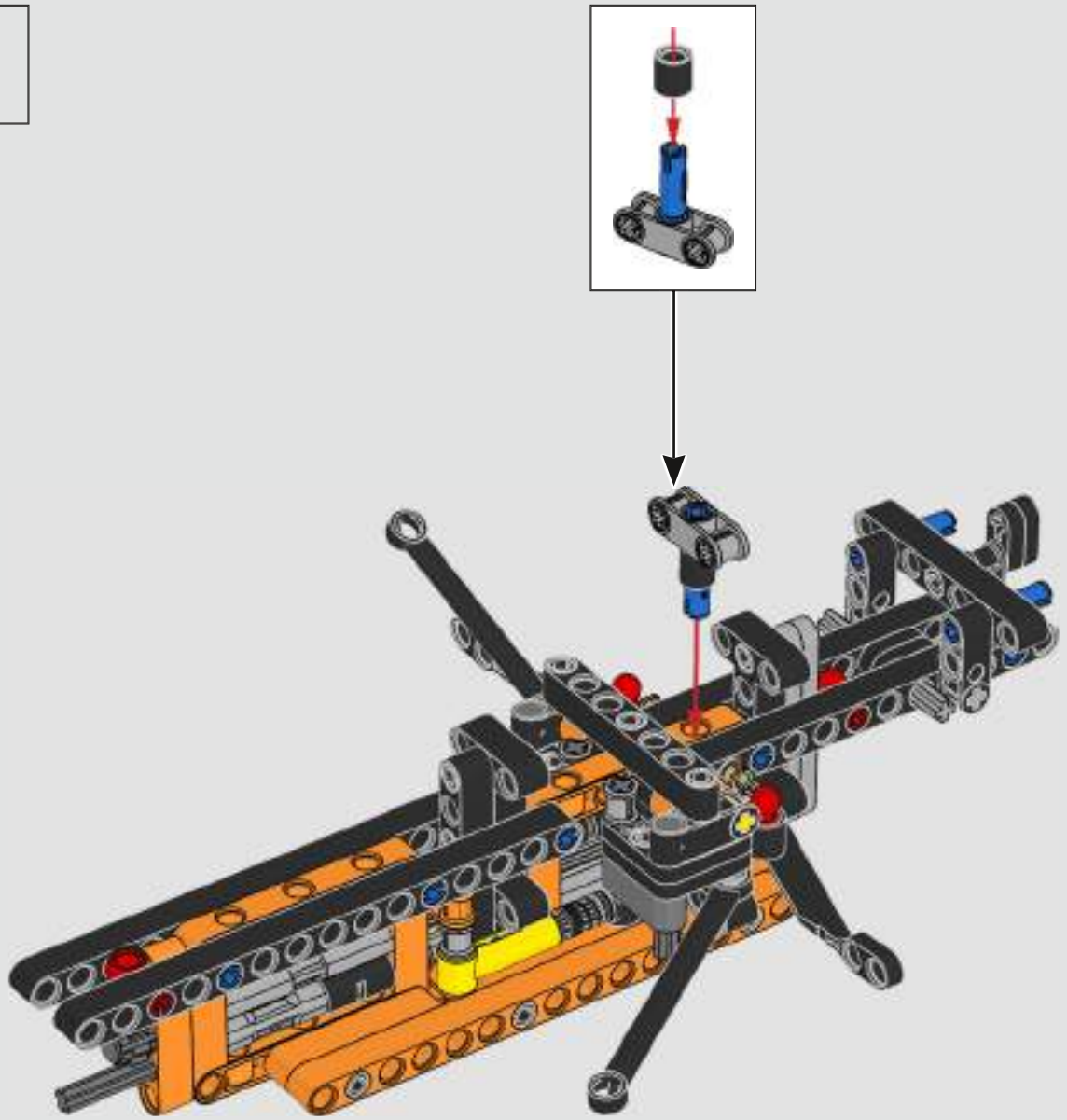

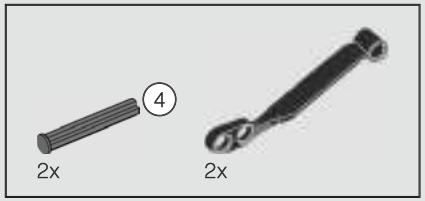

101

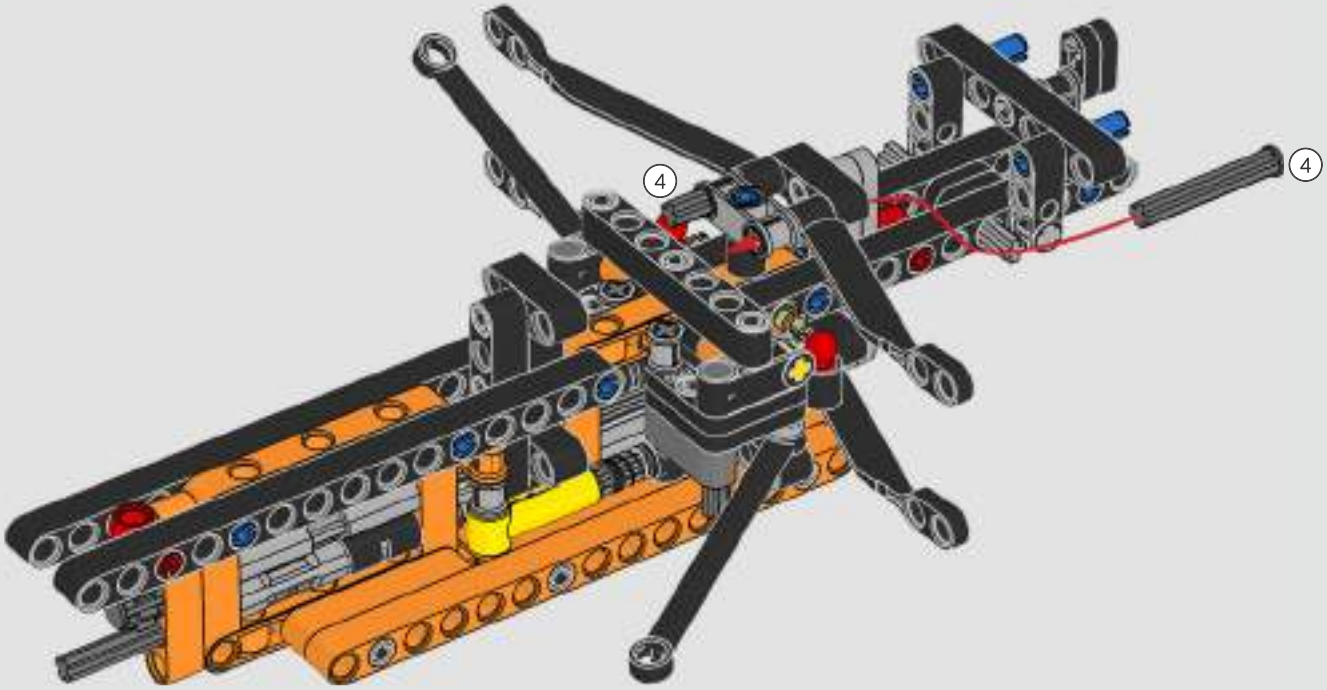

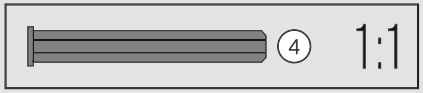

2x

102

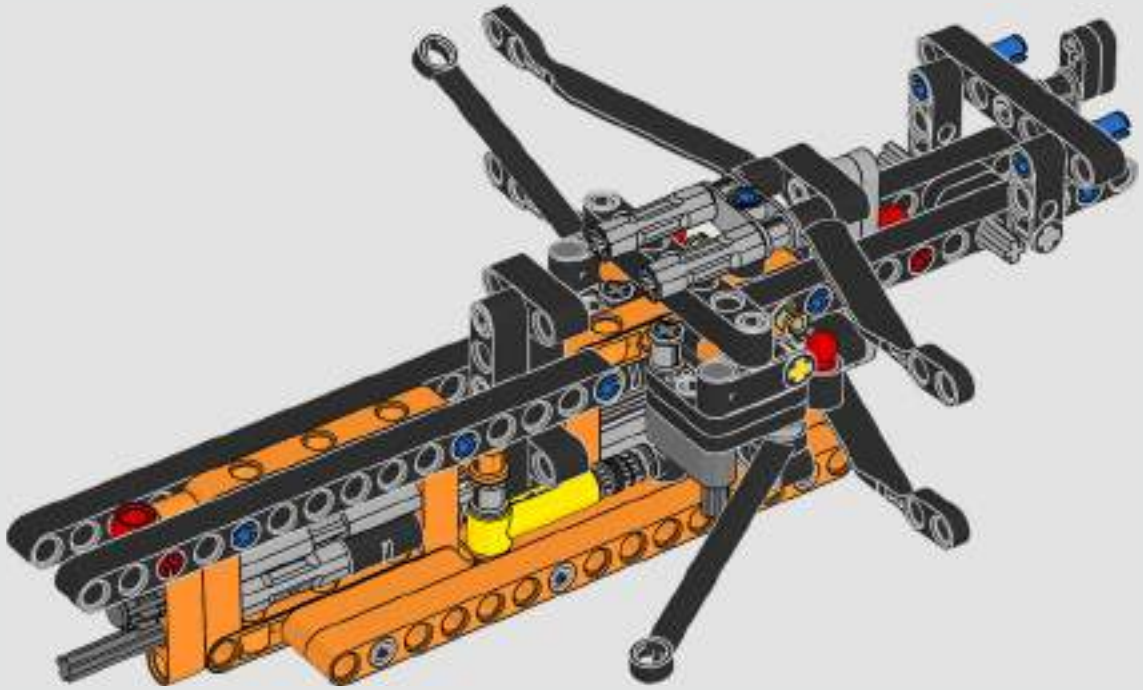

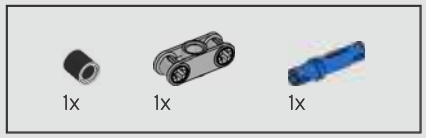

103

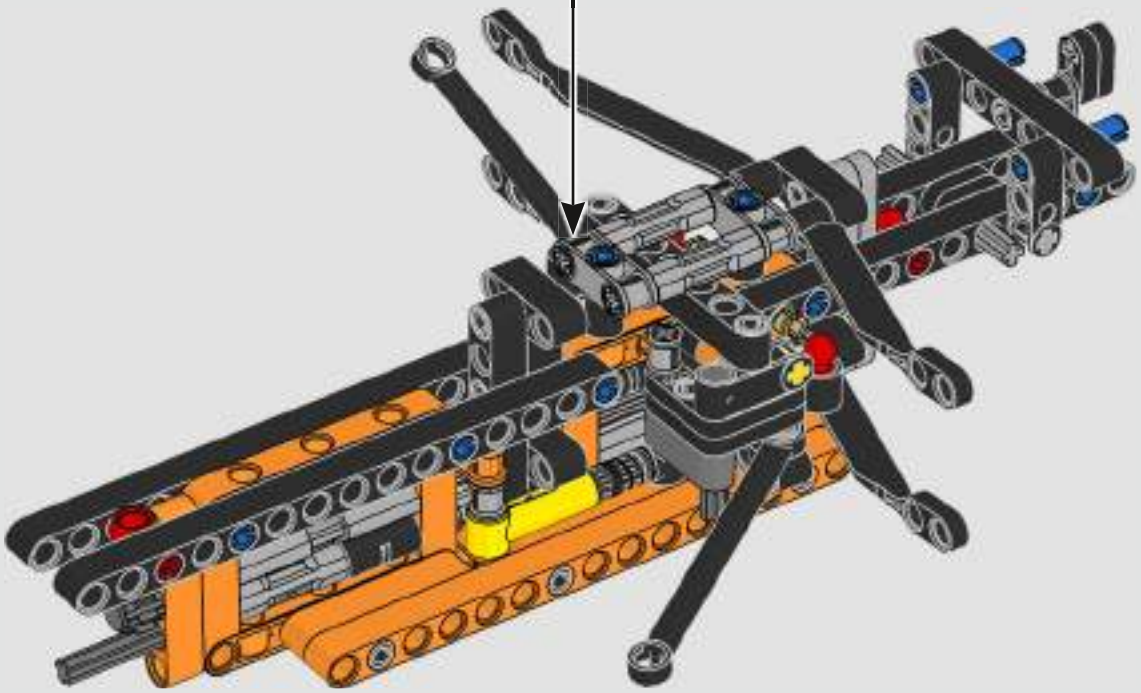

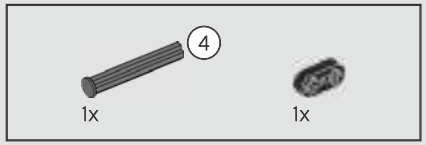

104

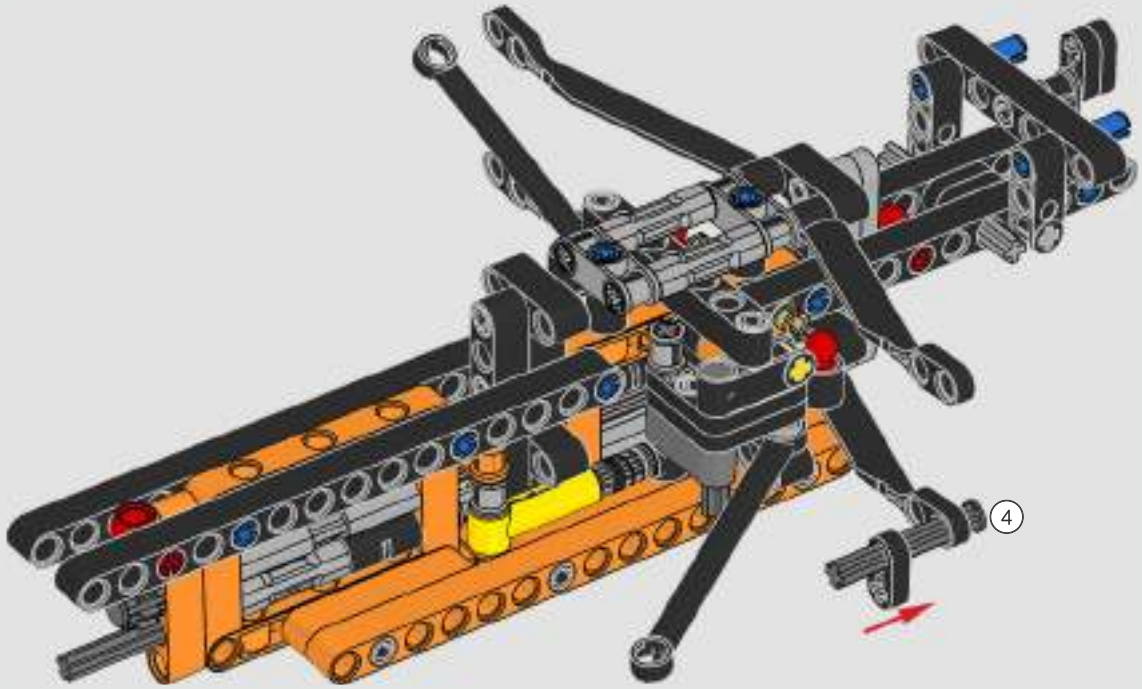

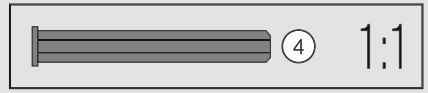

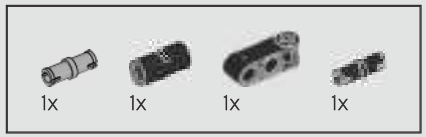

105

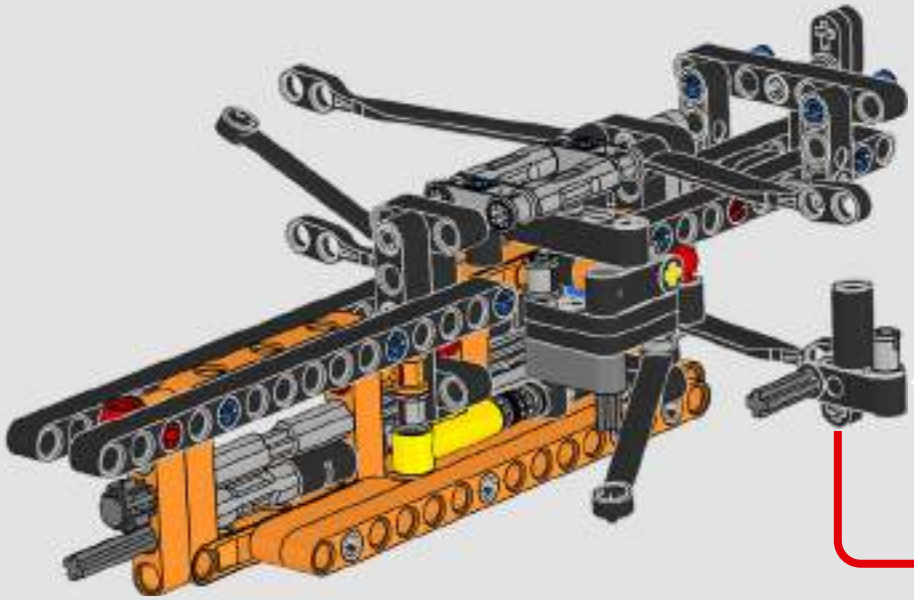

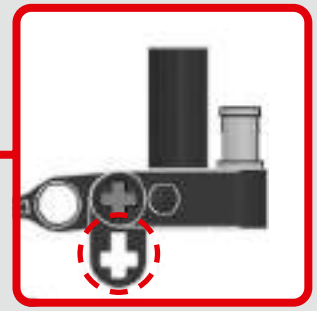

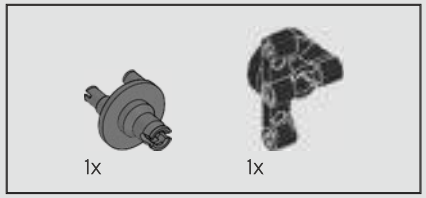

106

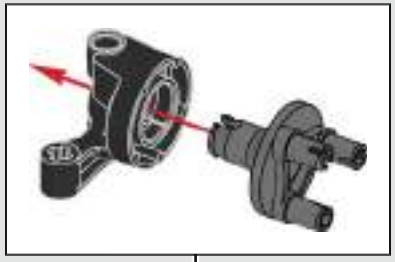

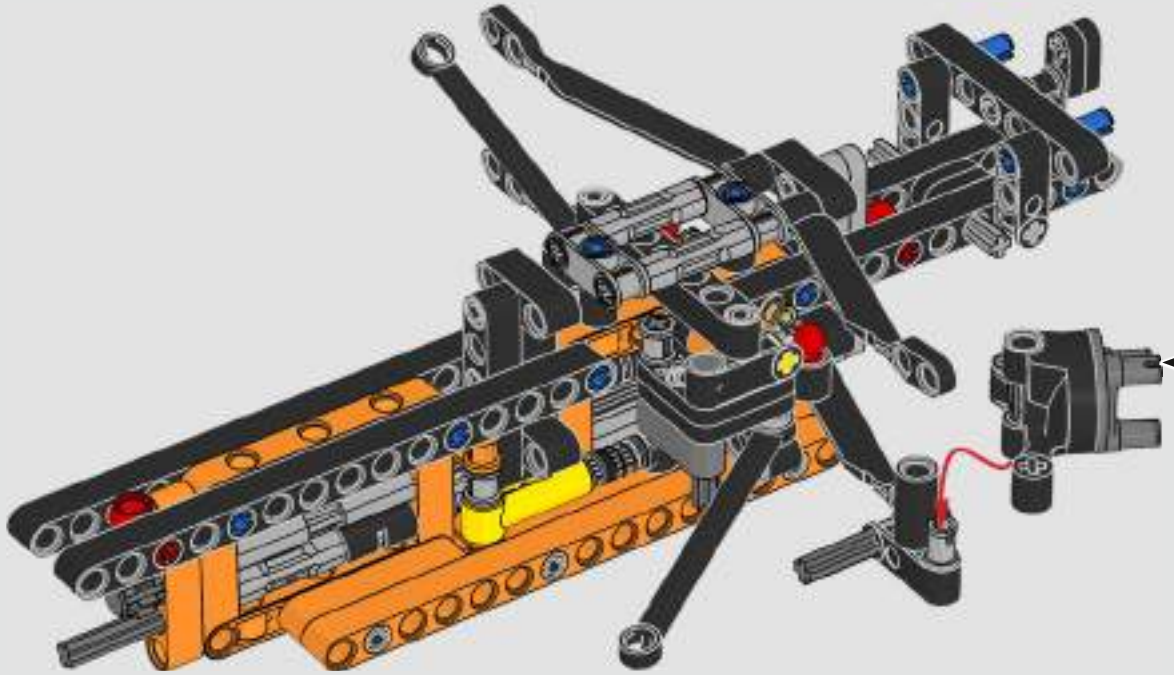

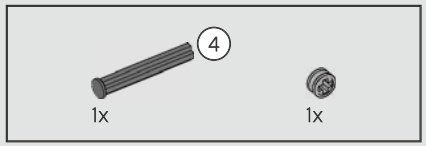

107

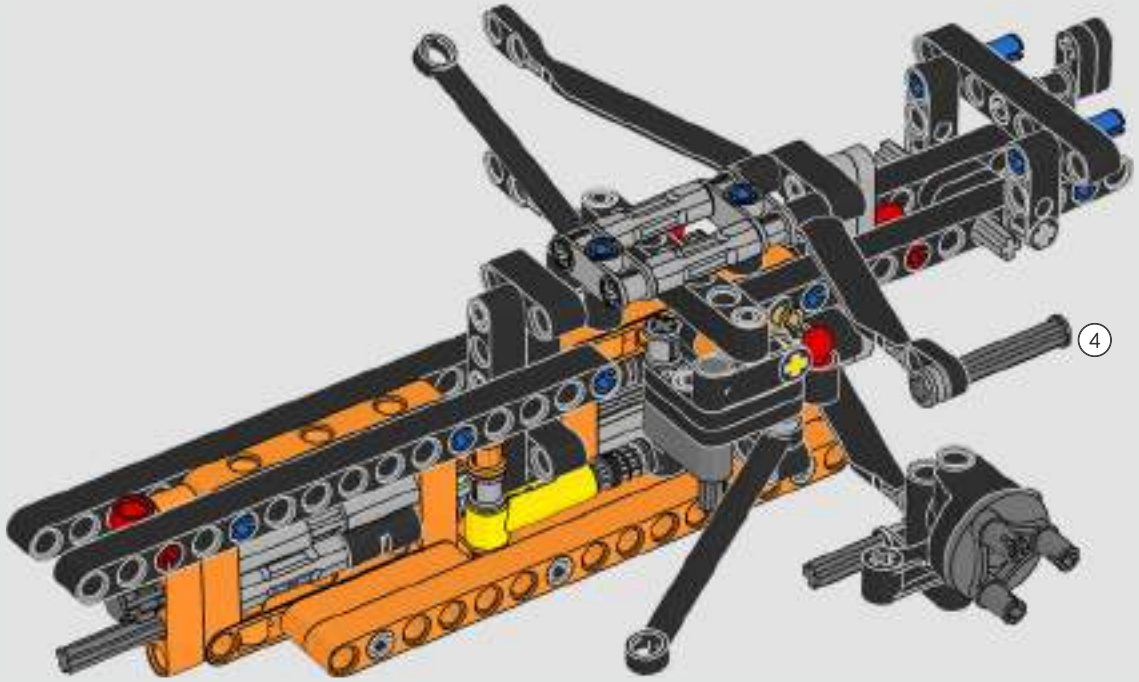

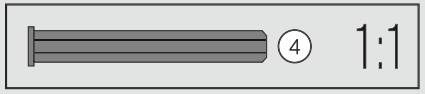

108

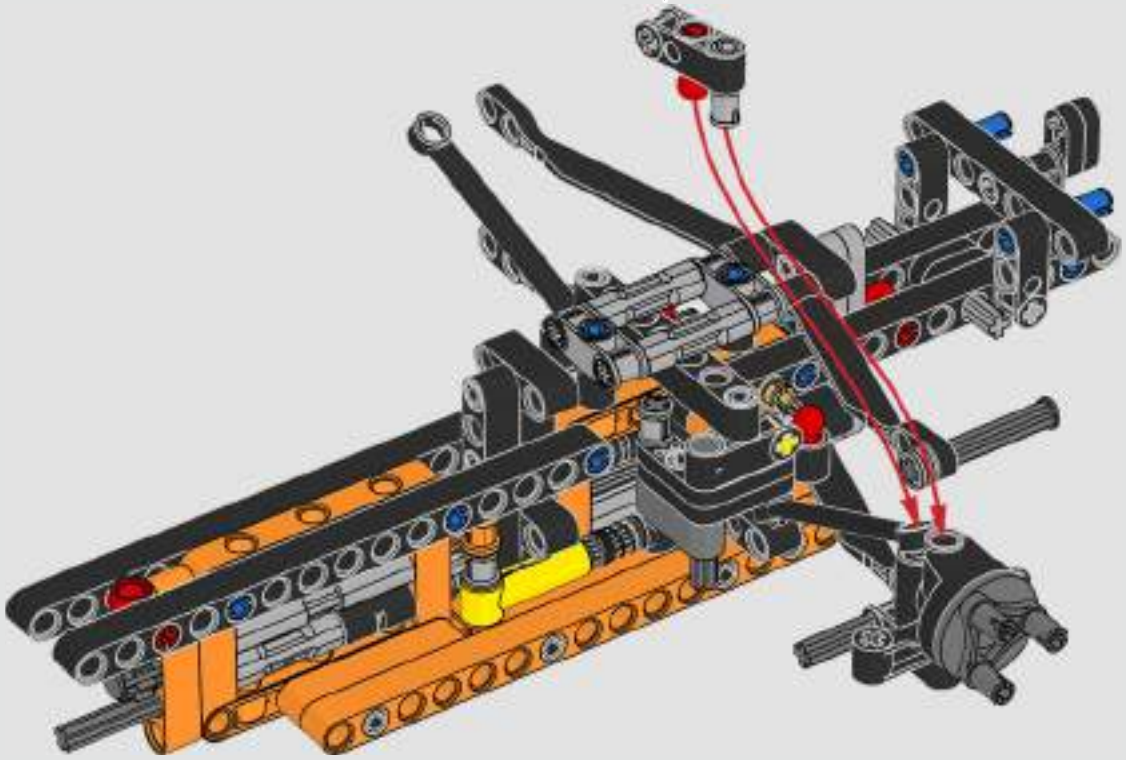

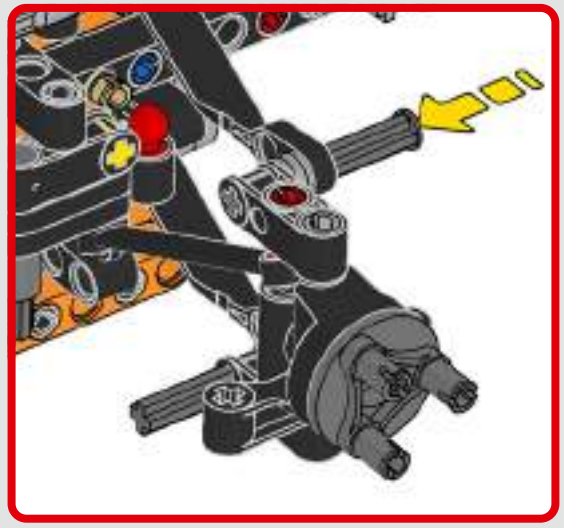

1x

109

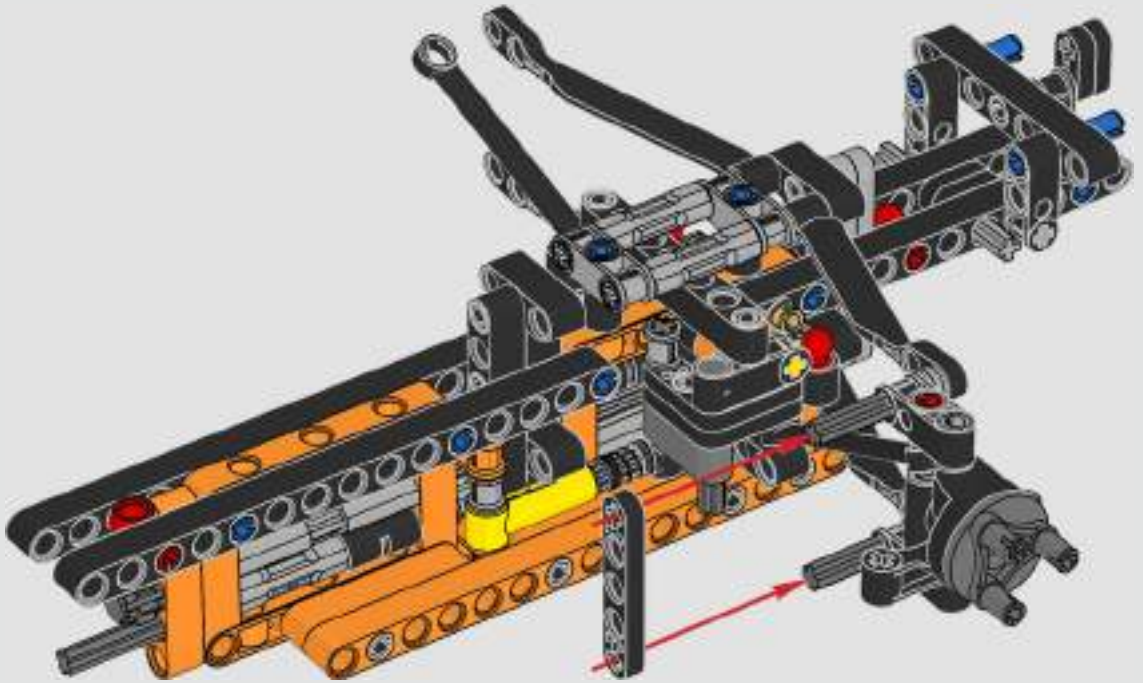

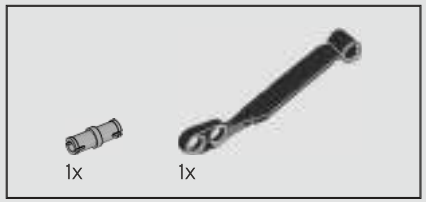

110

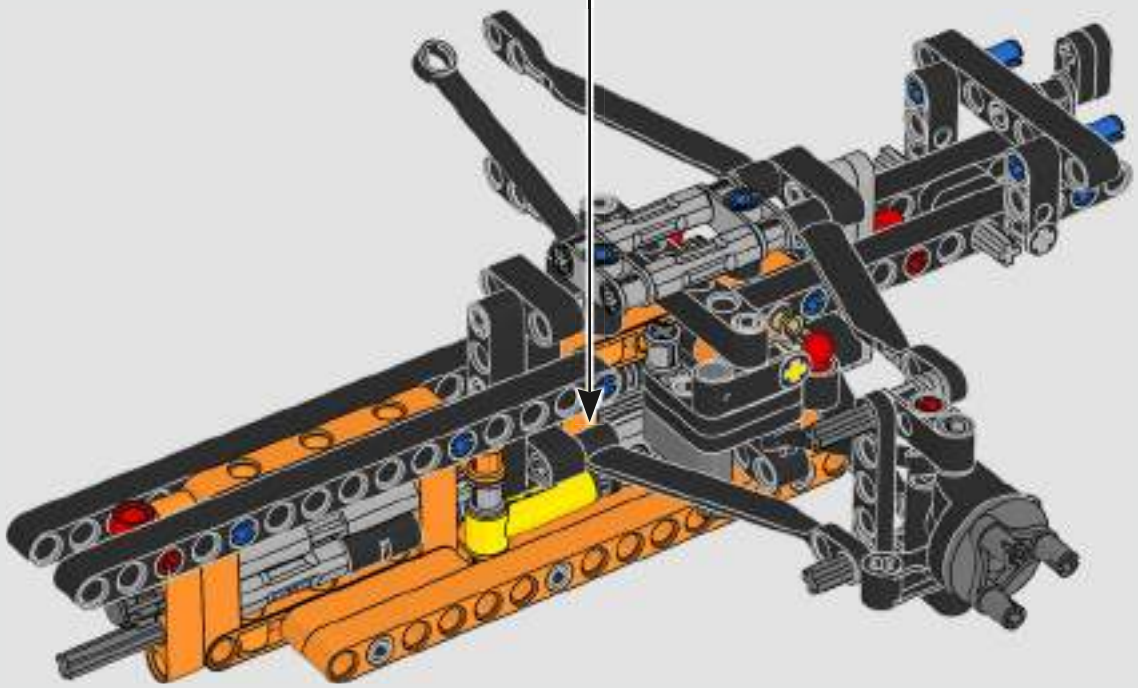

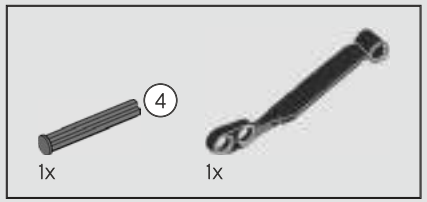

111

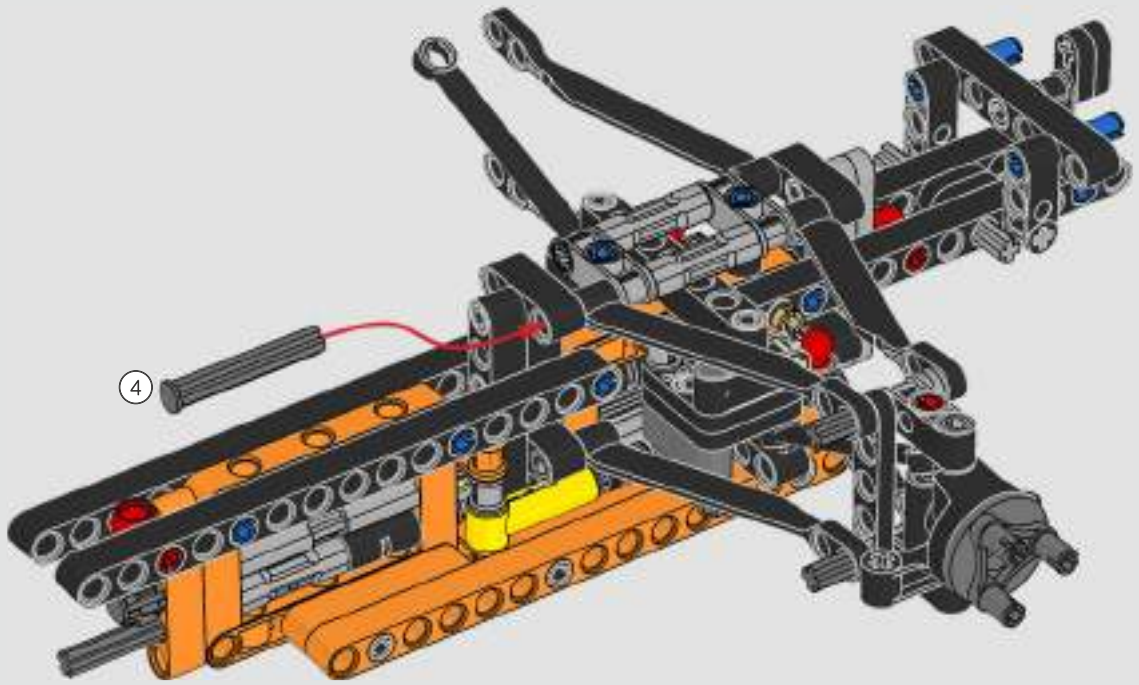

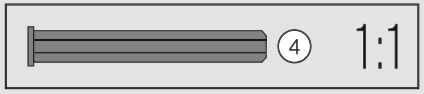

112

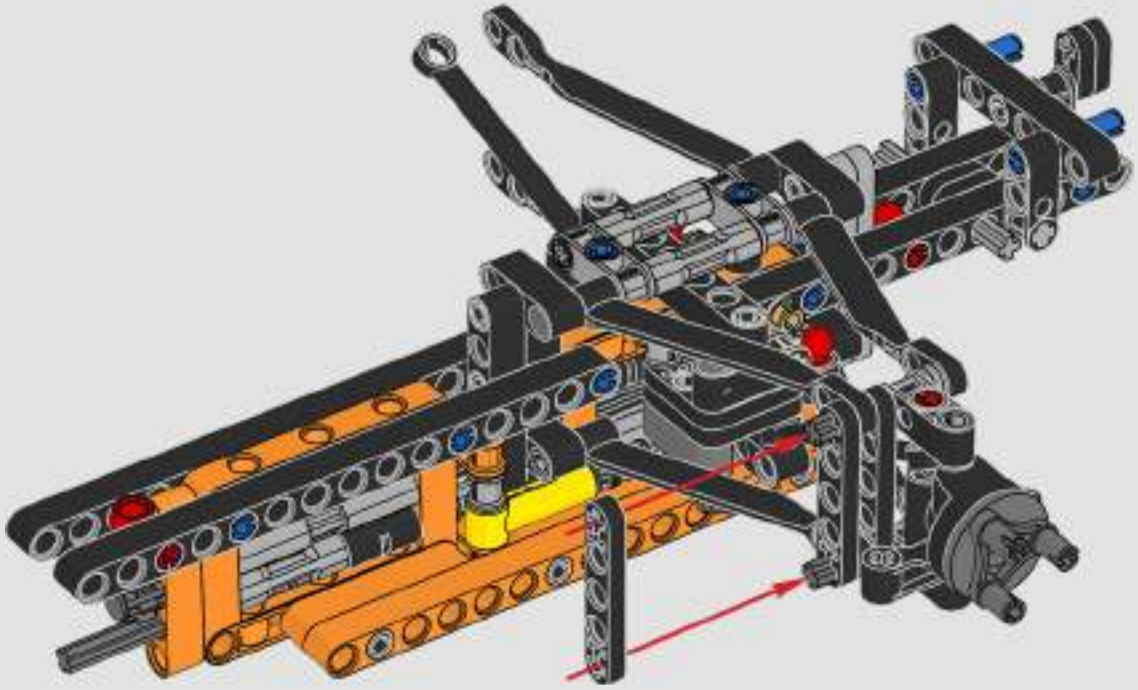

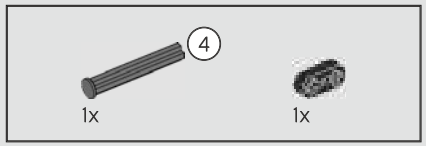

113

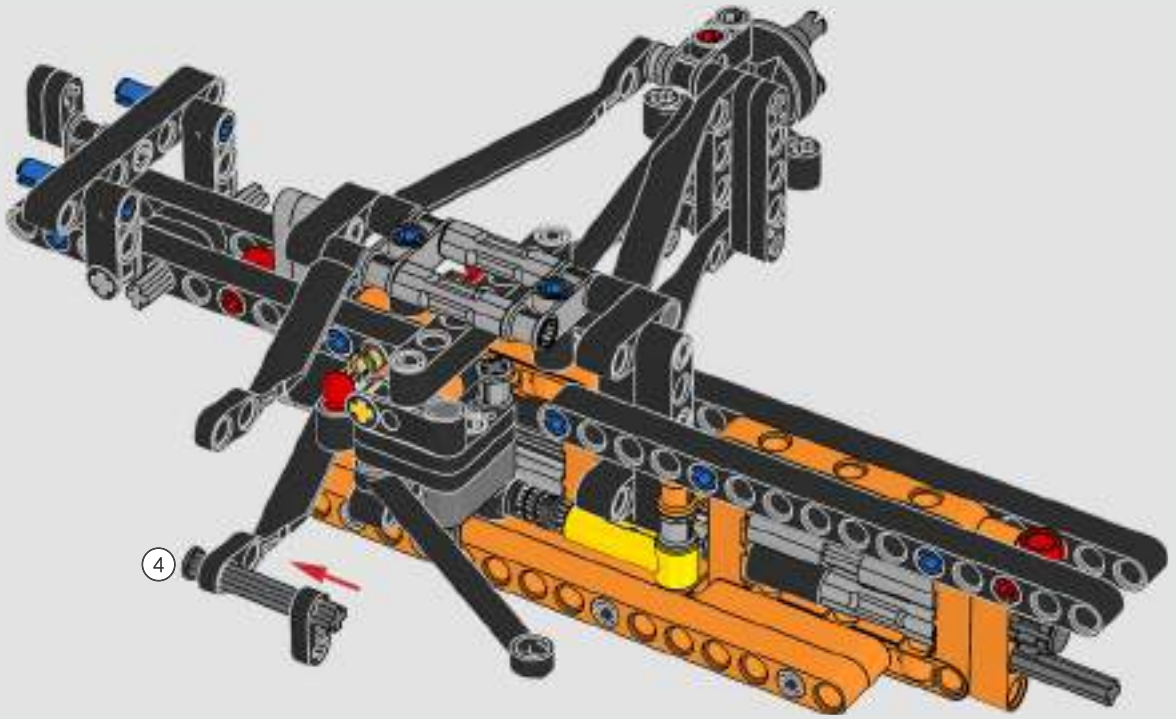

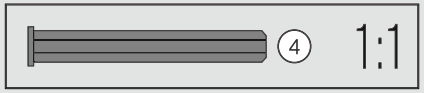

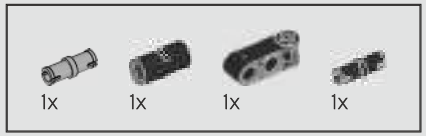

114

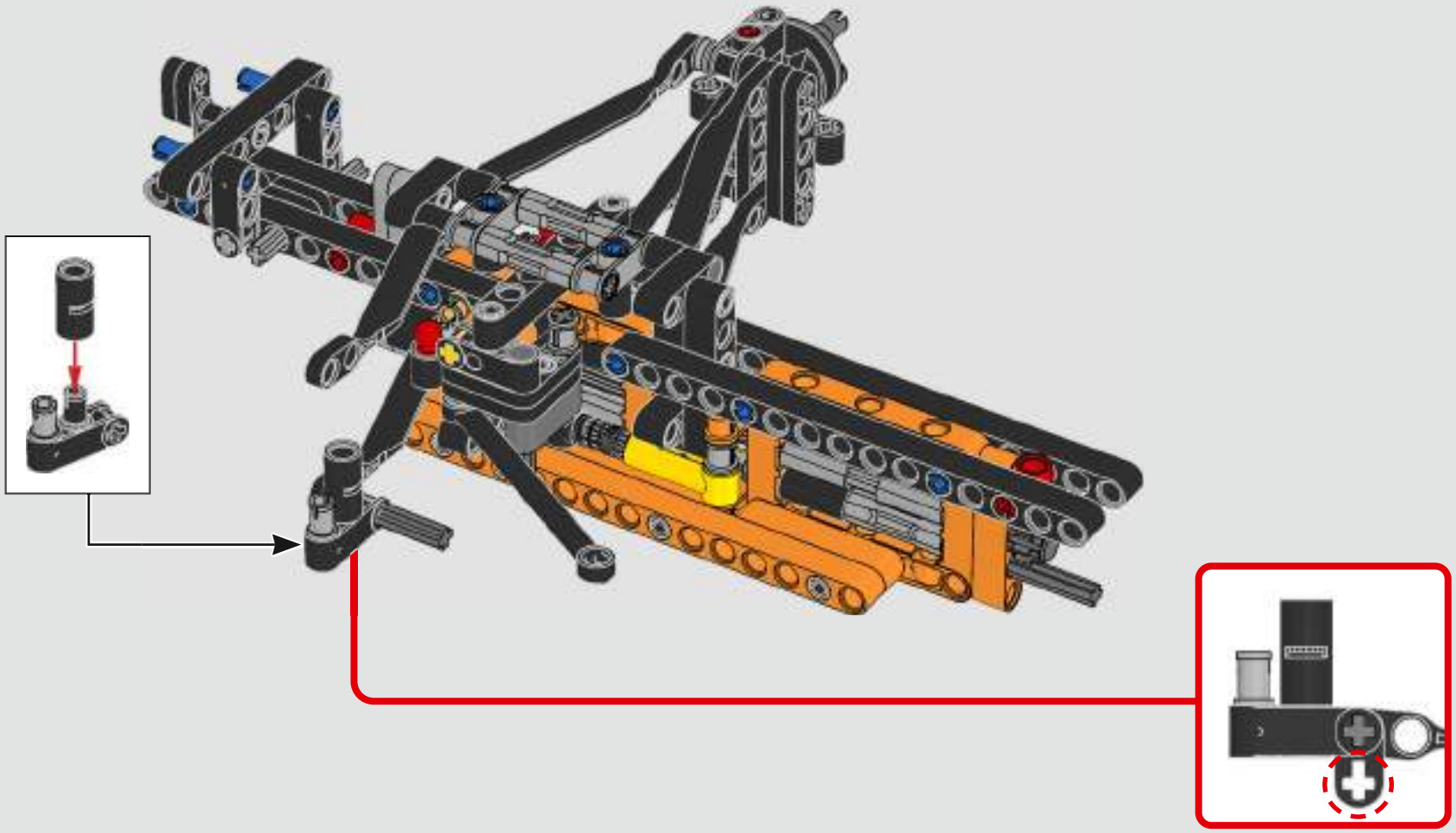

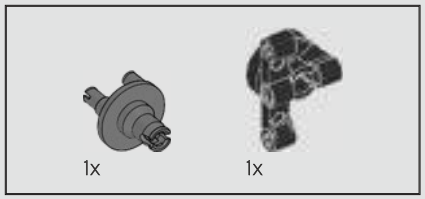

115

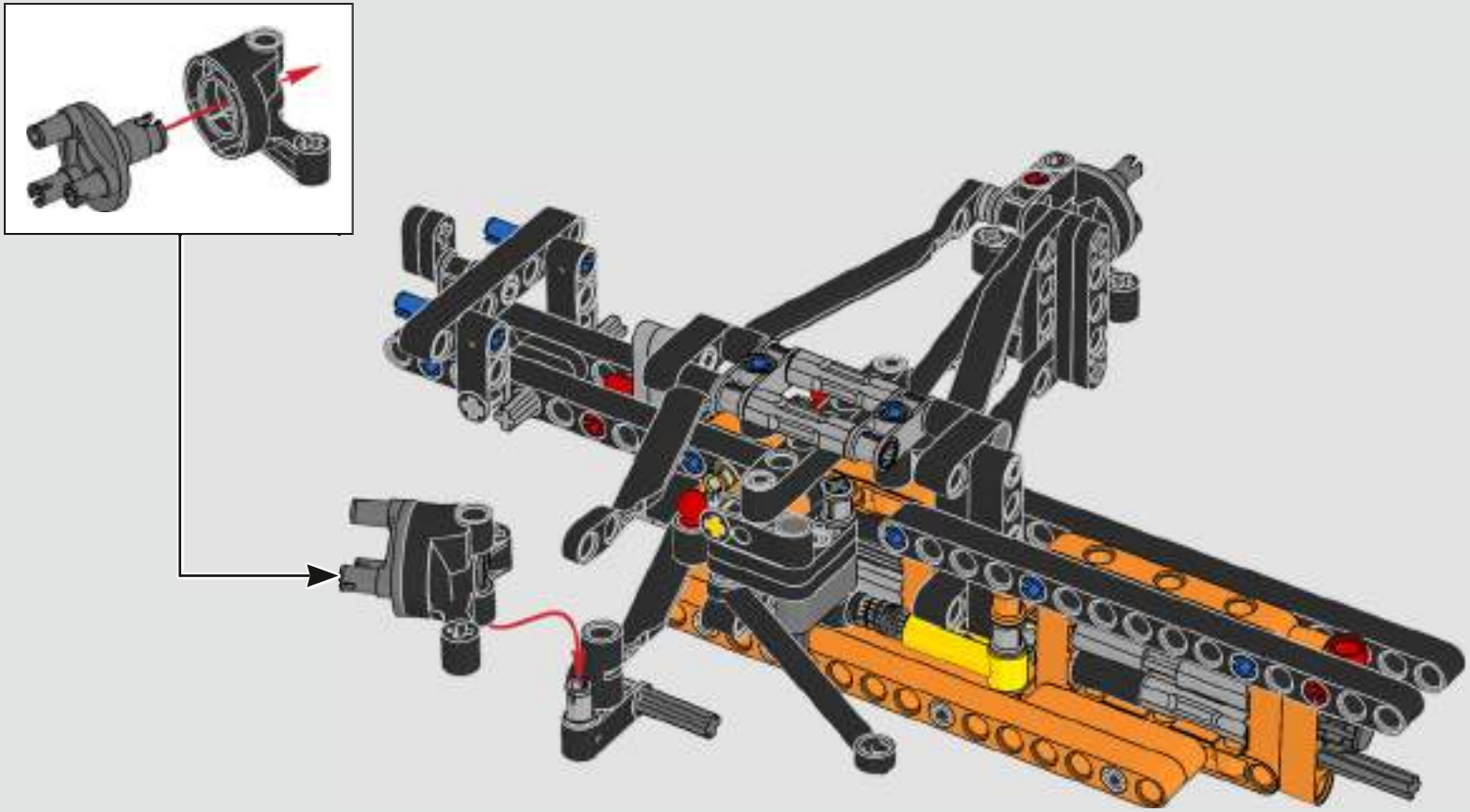

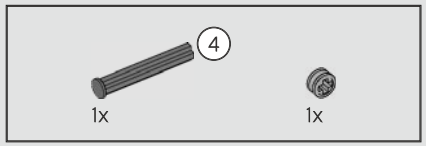

116

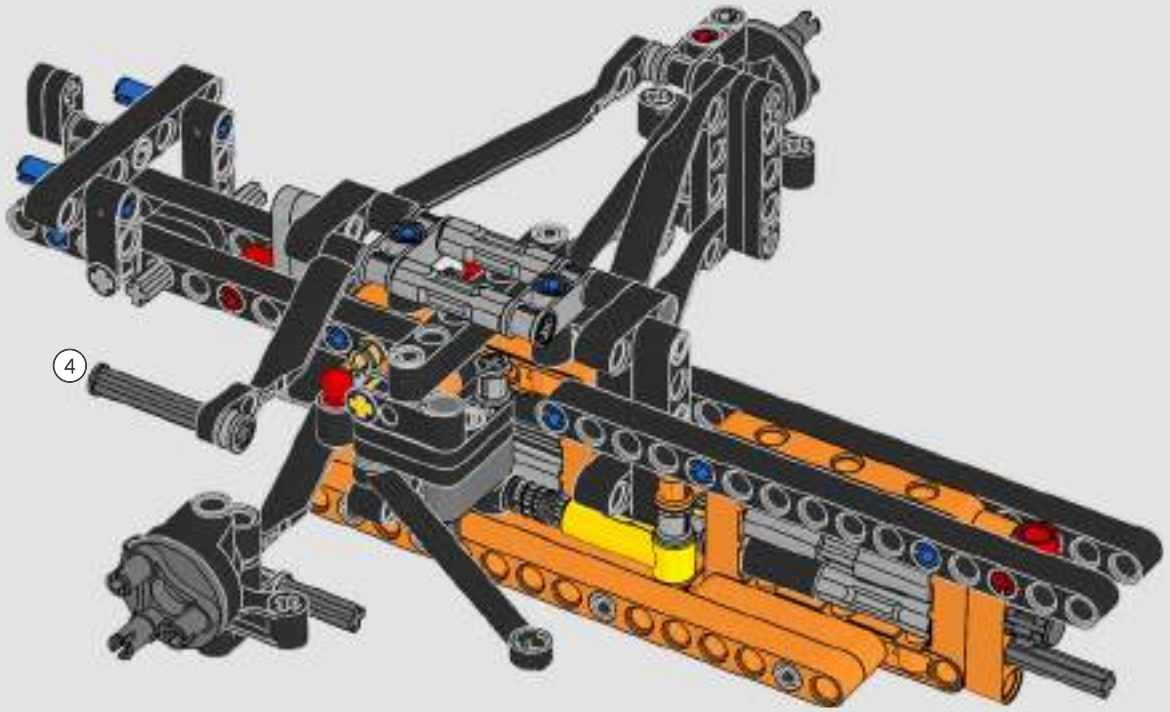

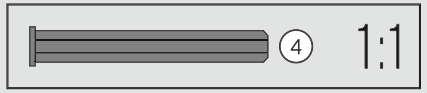

117

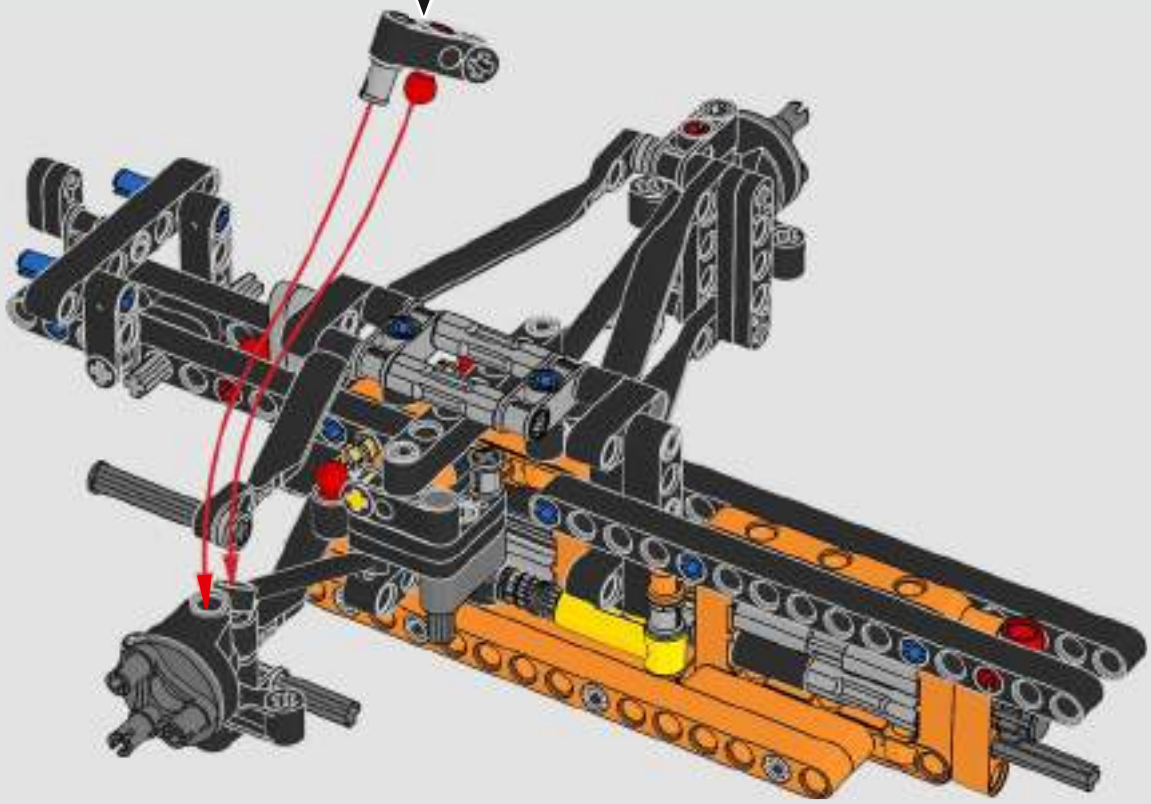

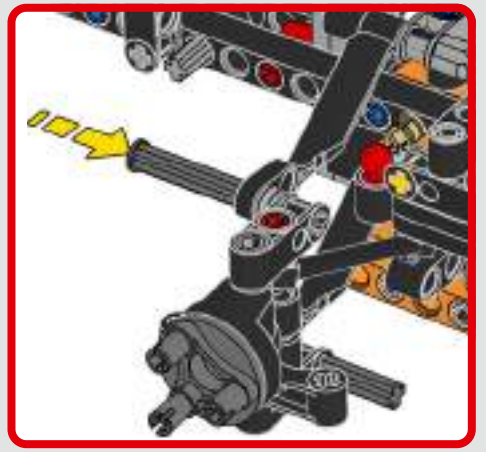

118

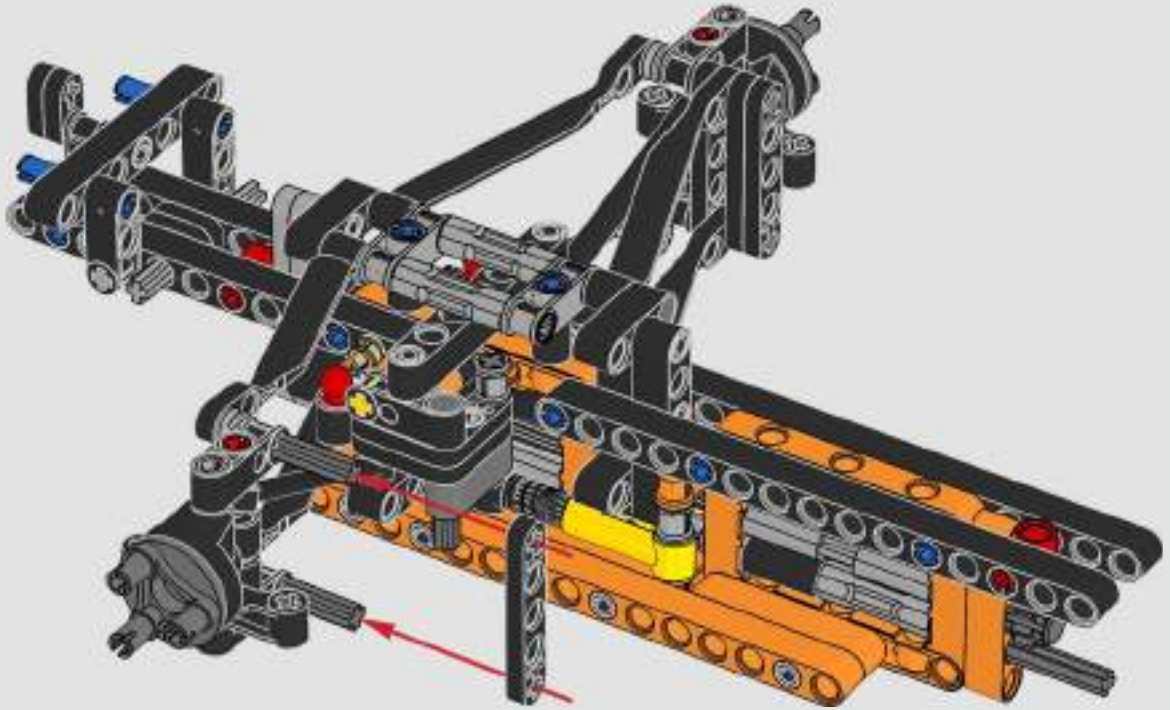

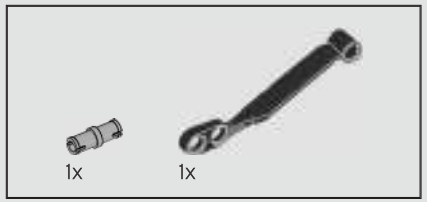

119

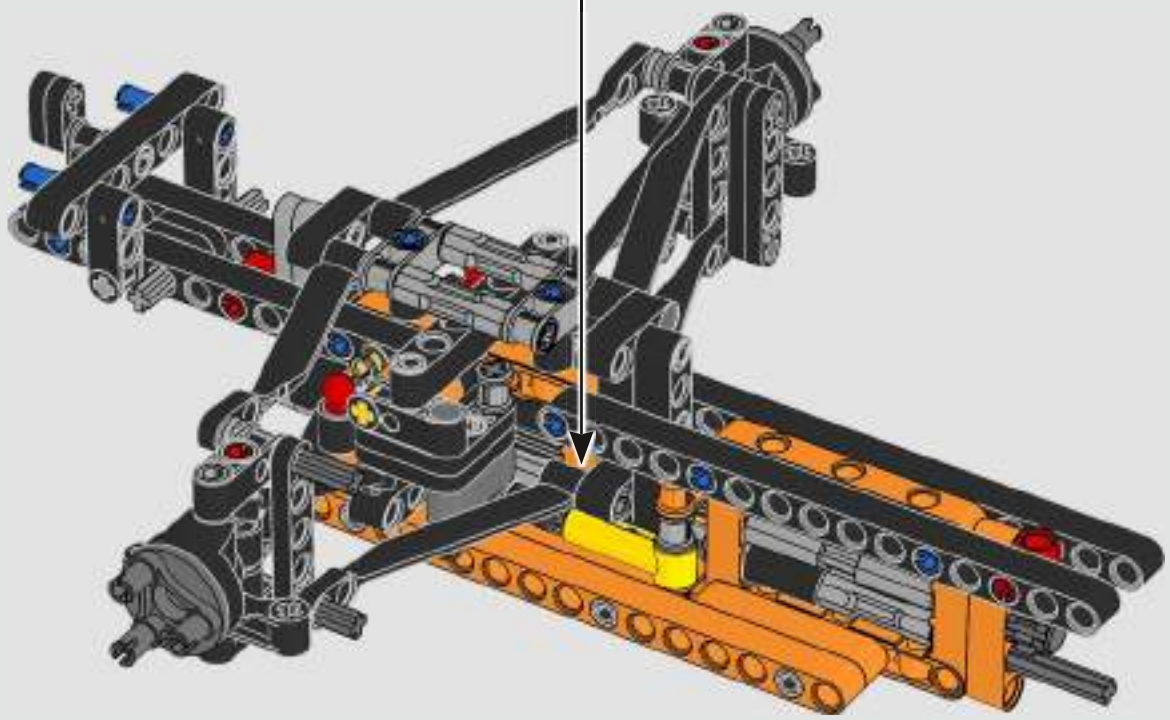

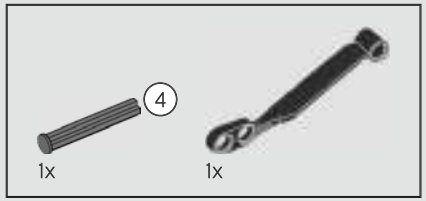

120

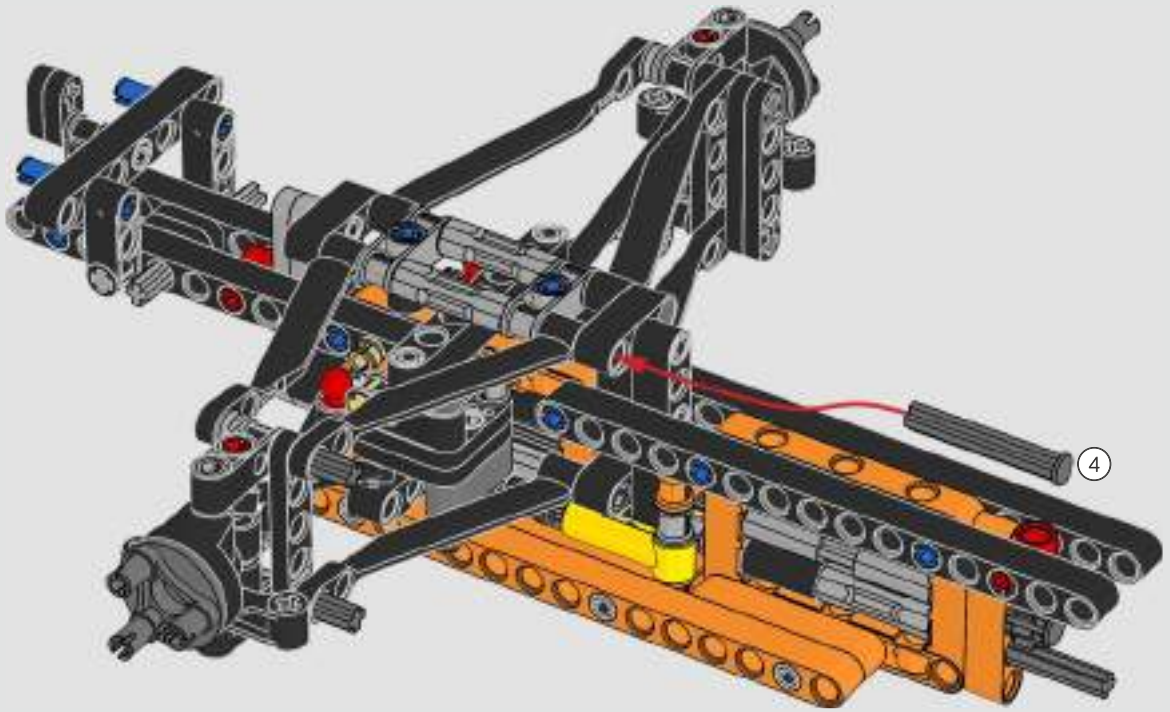

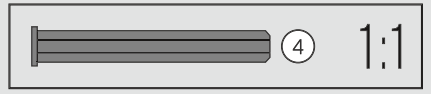

2x

121

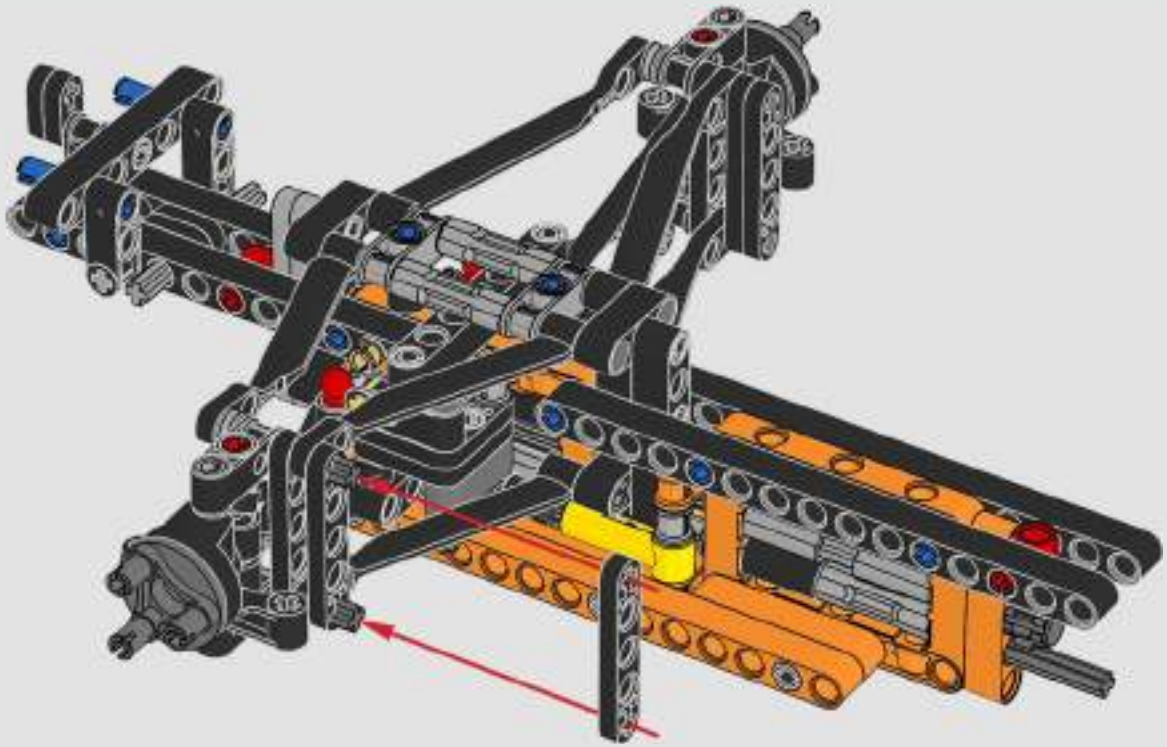

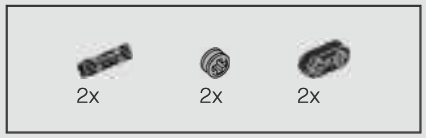

122

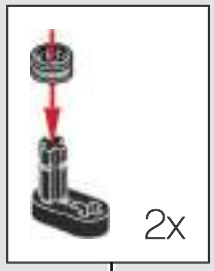

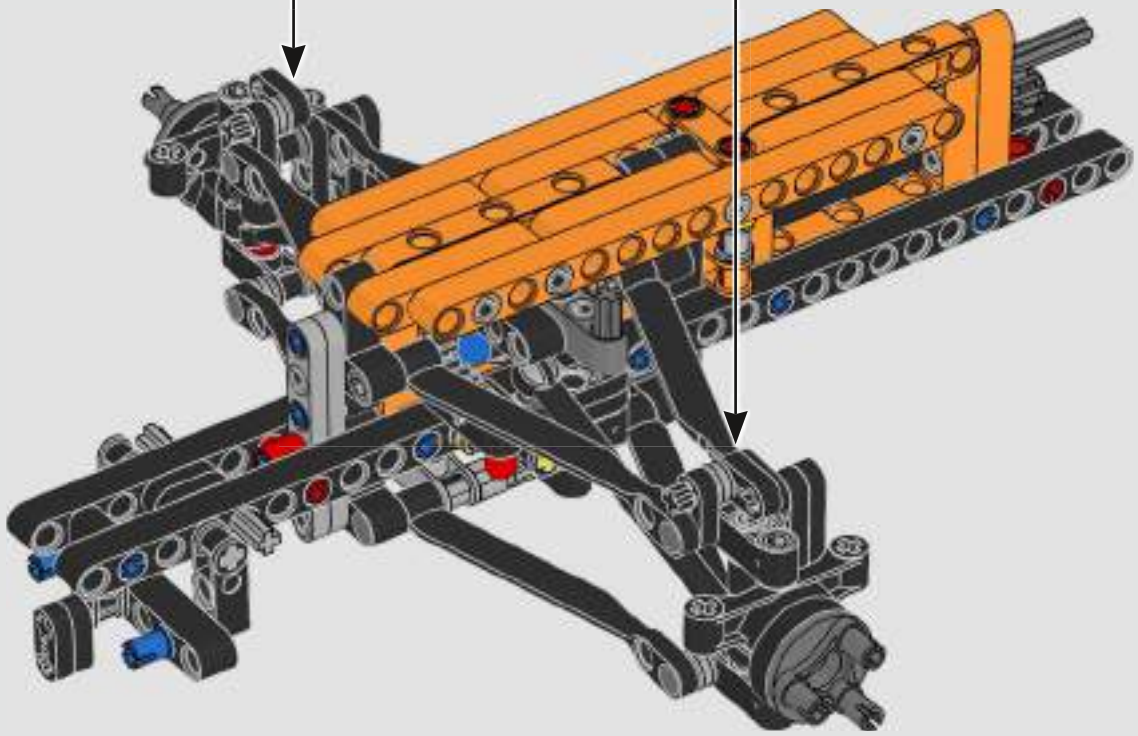

123

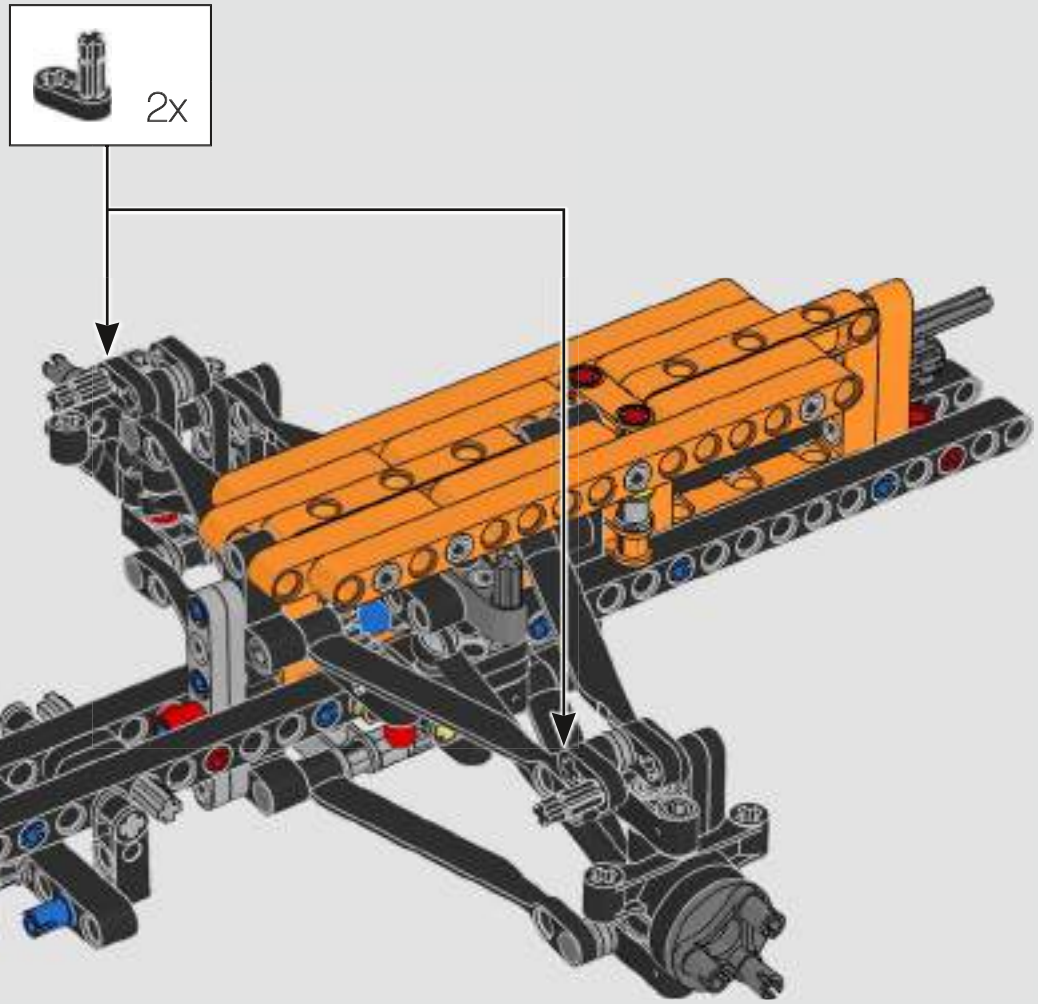

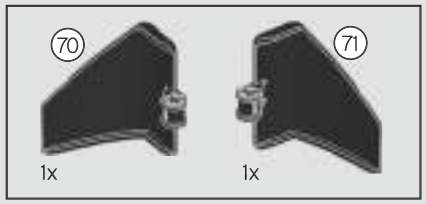

124

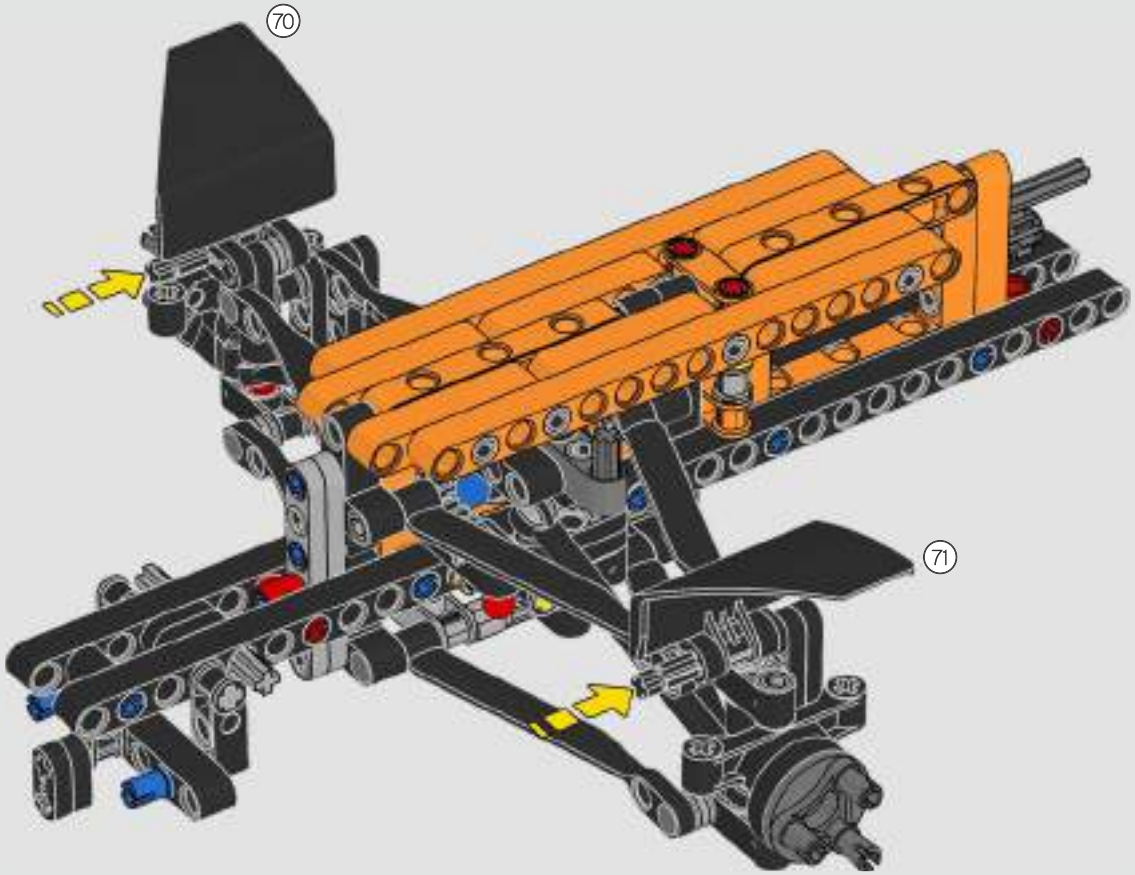

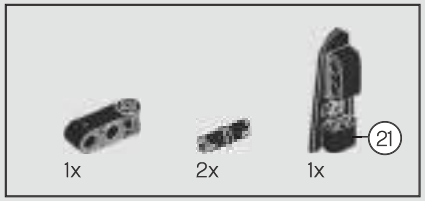

125

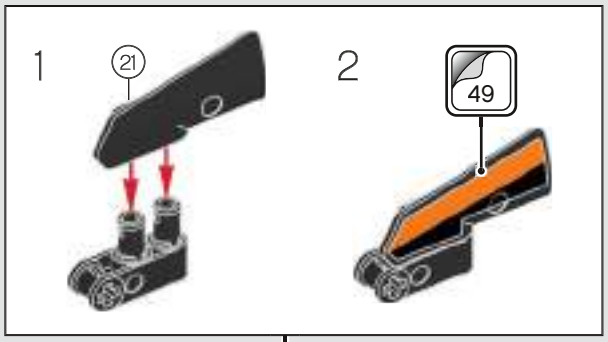

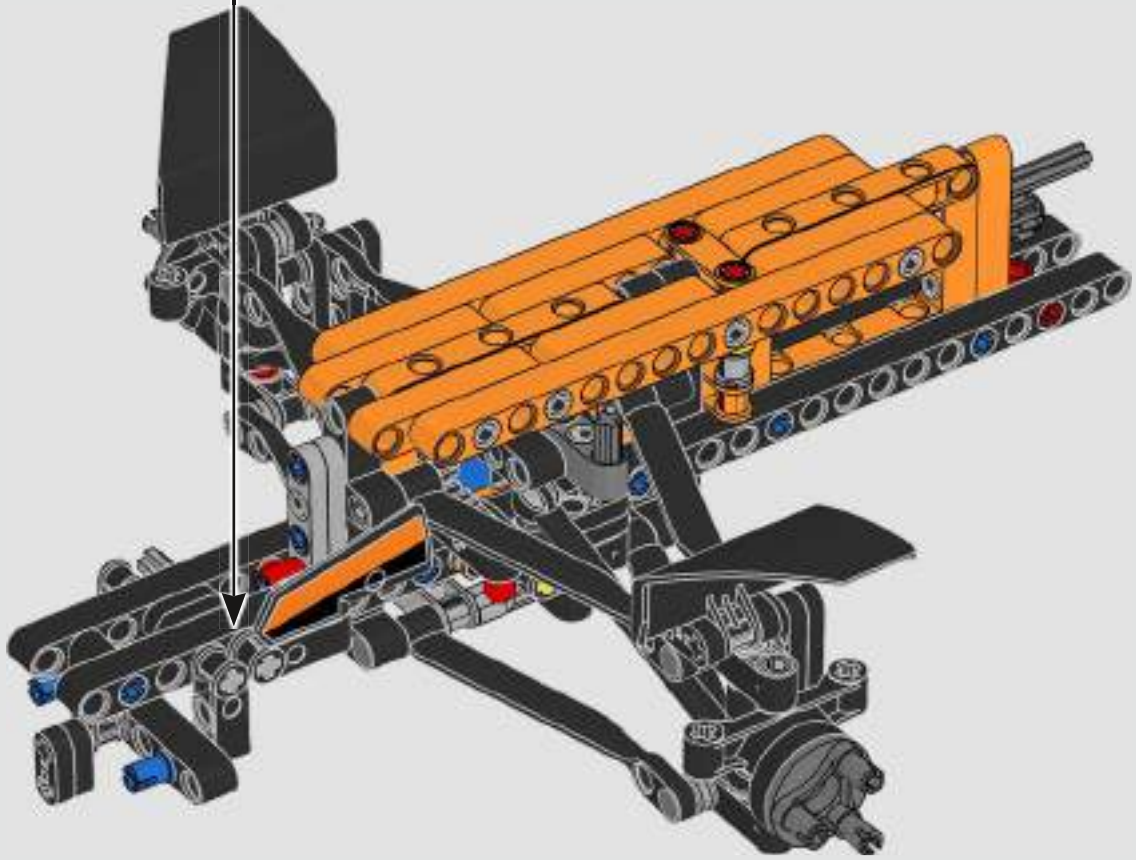

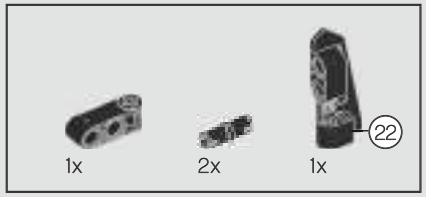

126

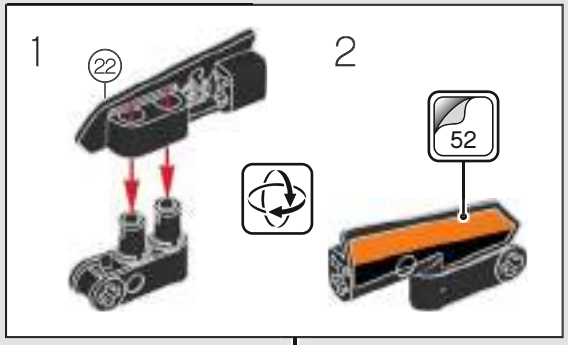

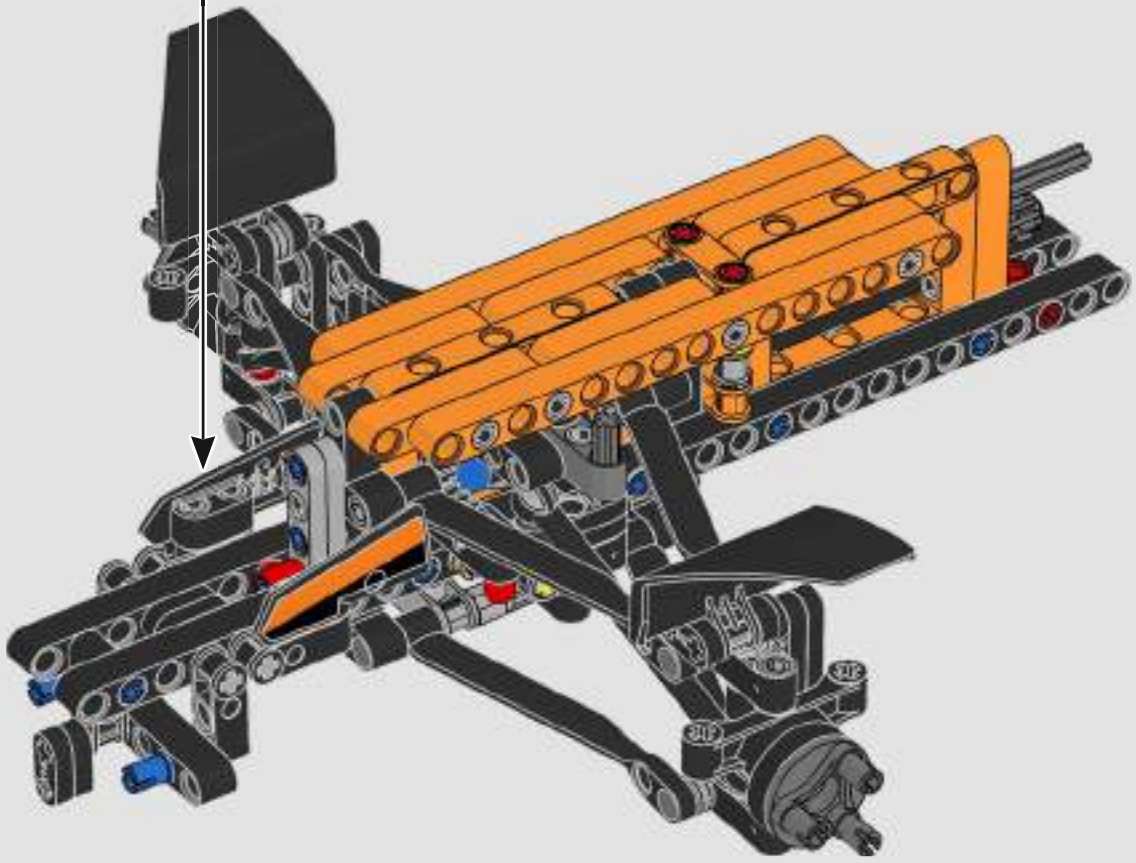

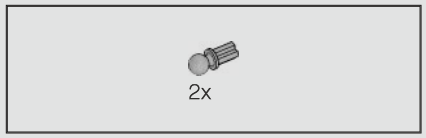

127

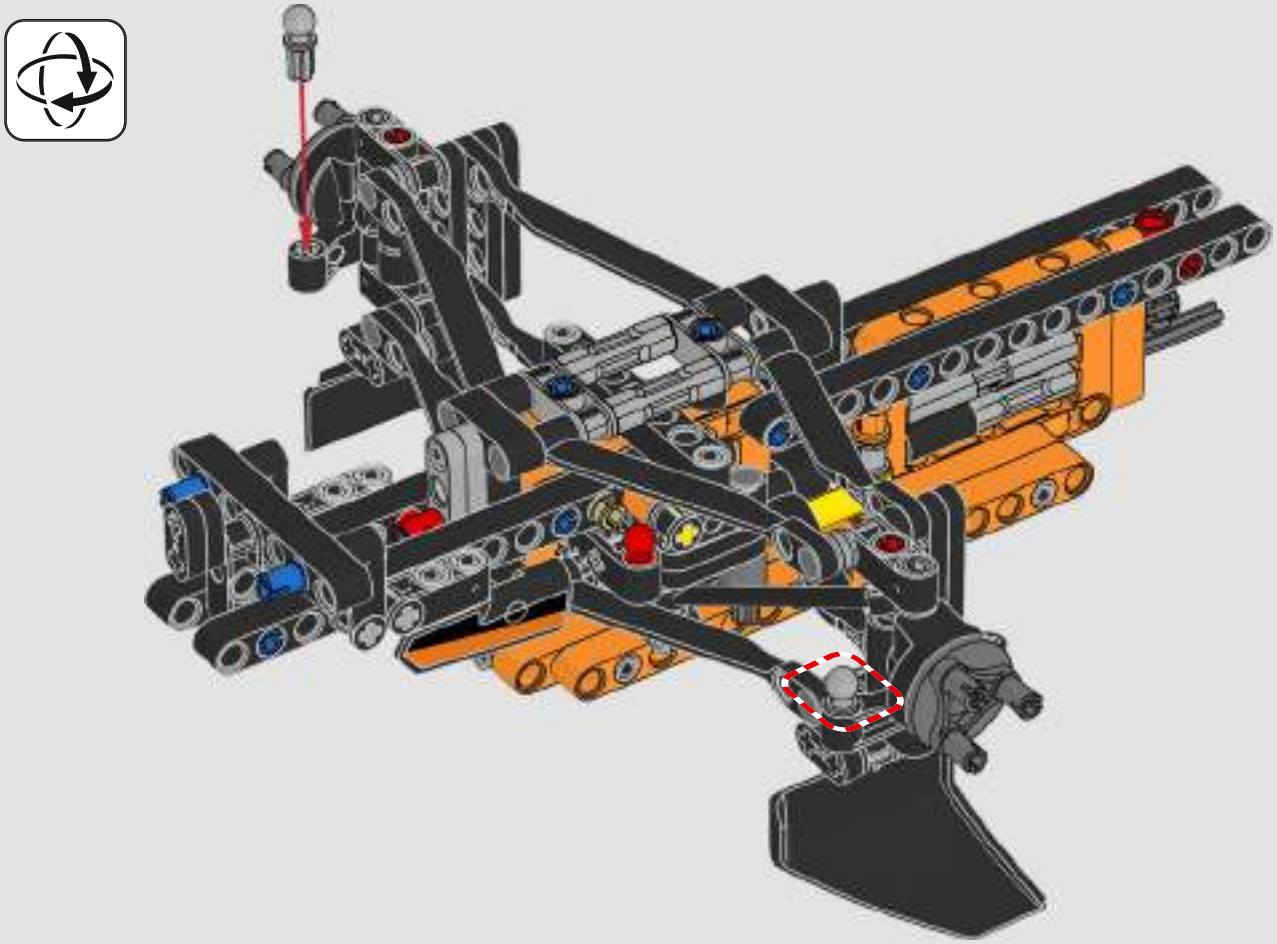

128

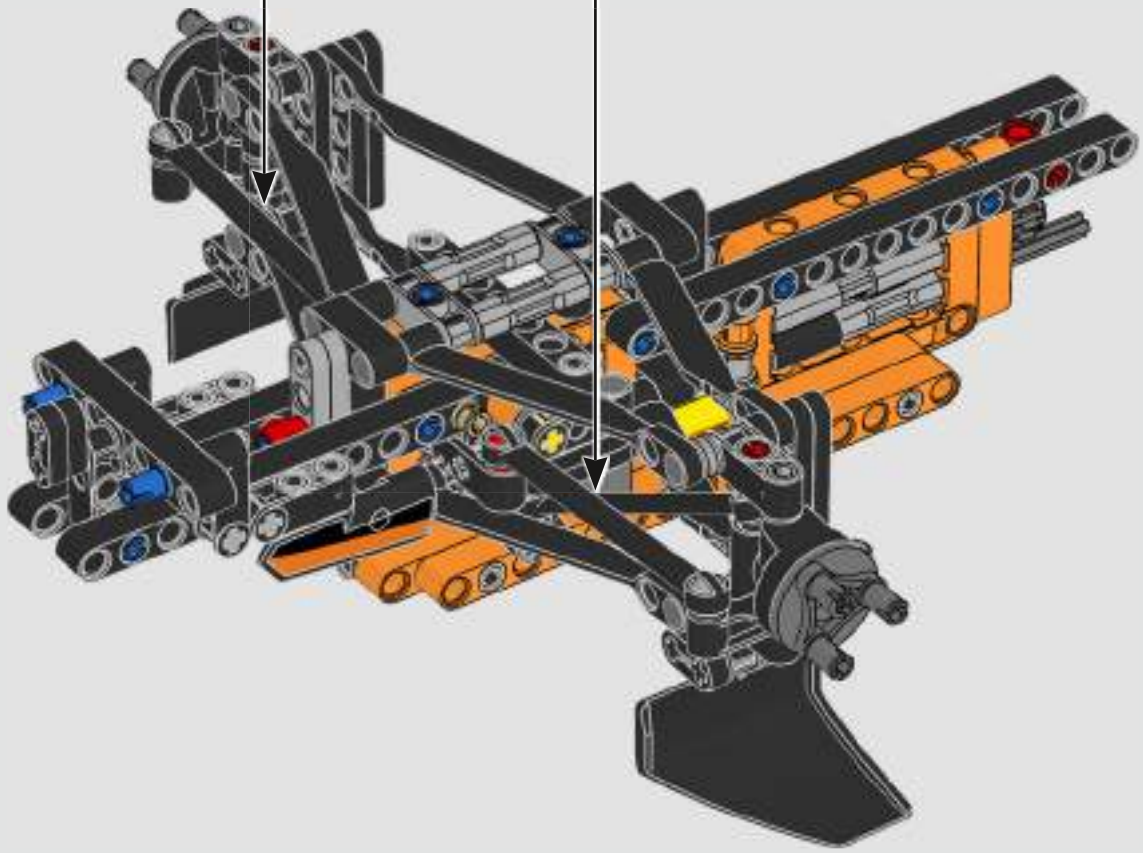

129

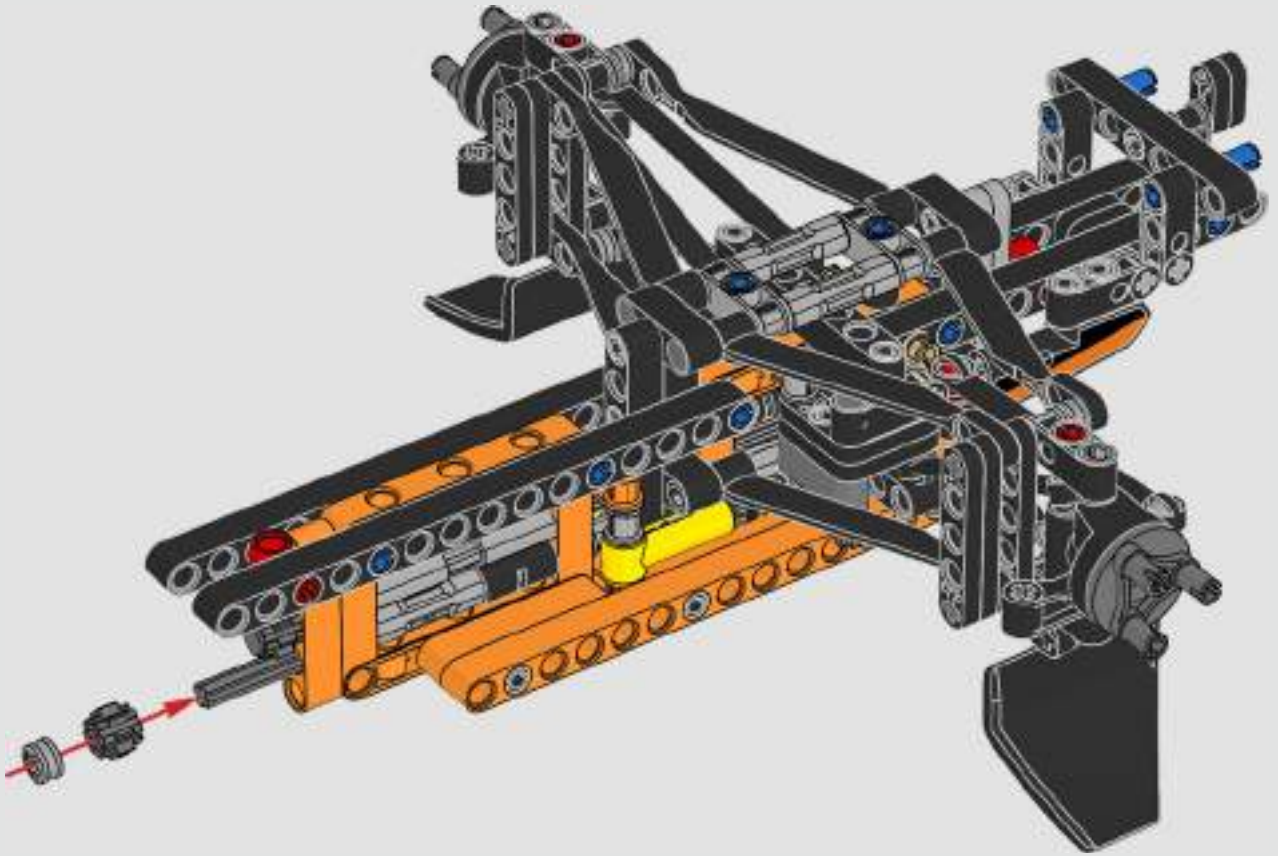

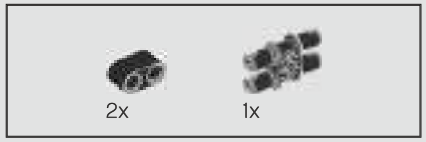

130

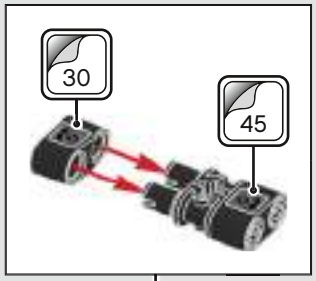

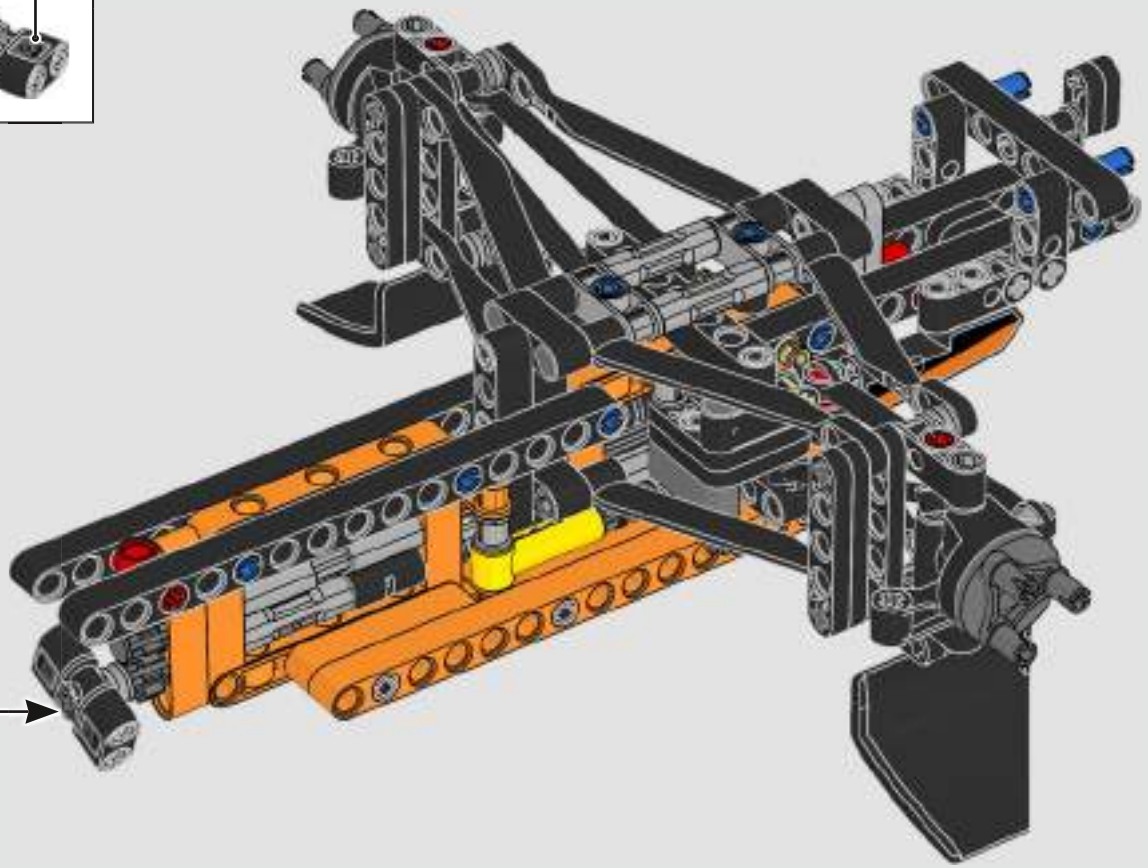

4x

131

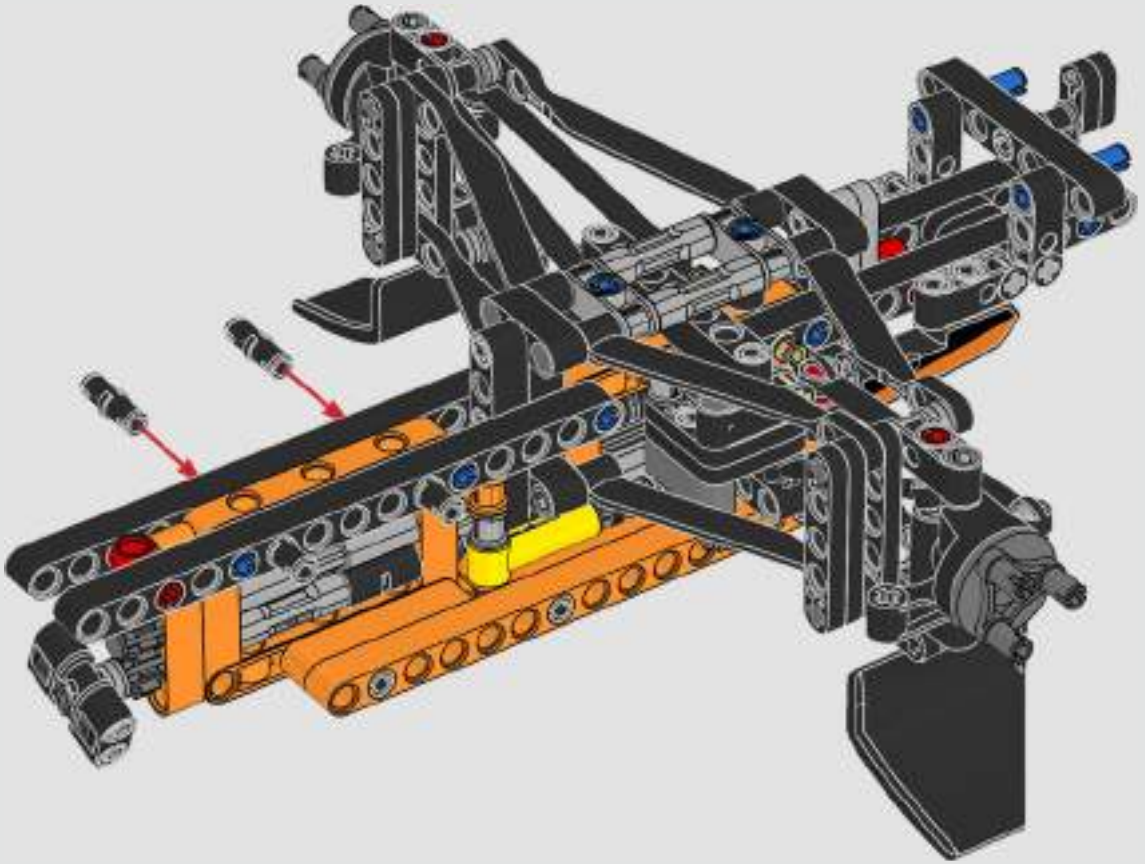

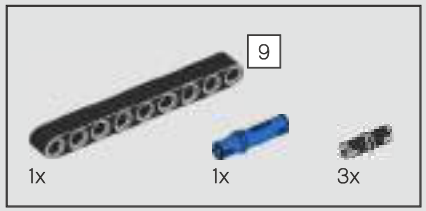

132

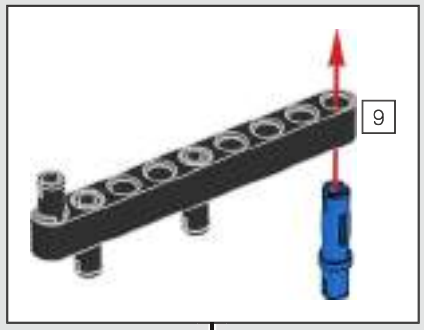

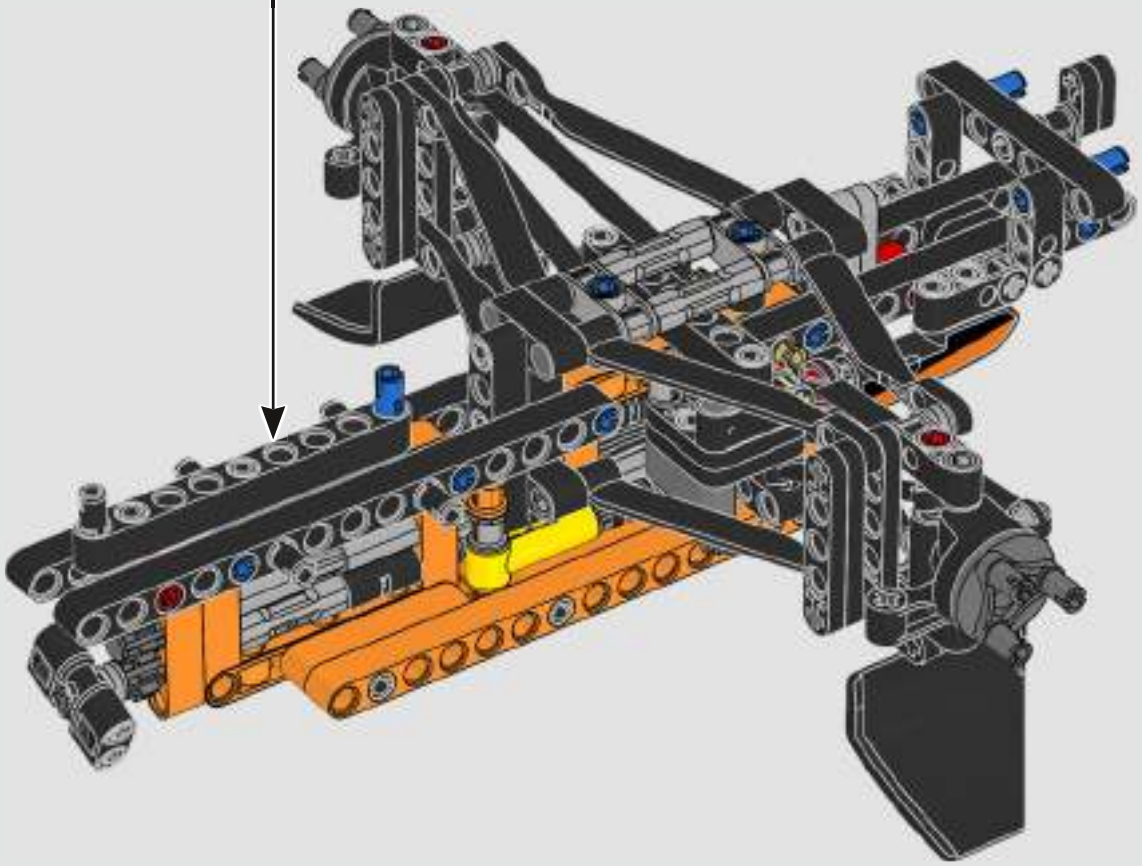

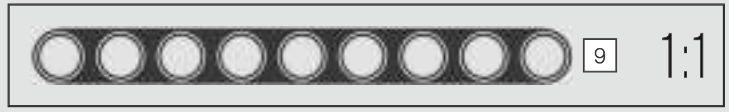

133

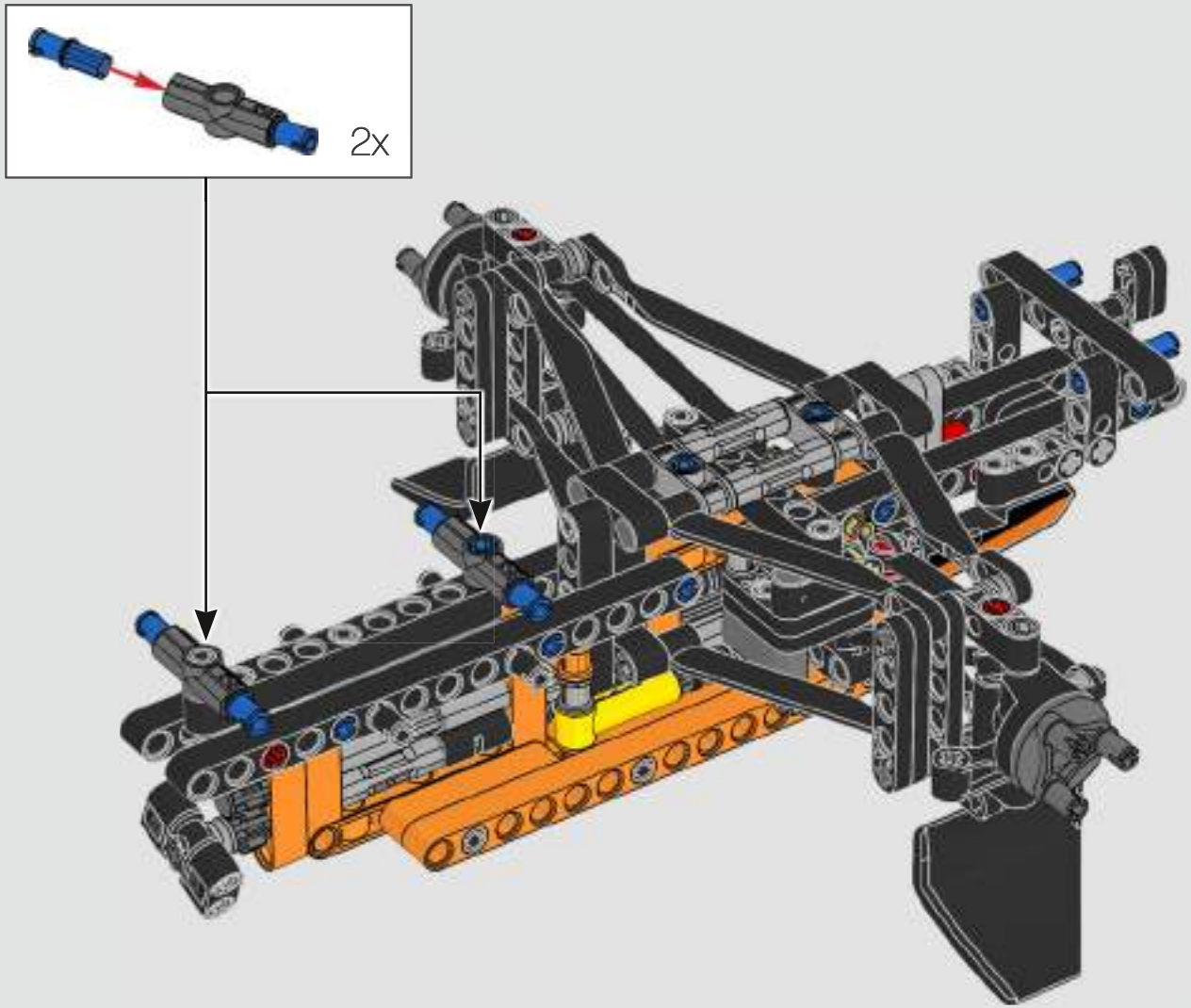

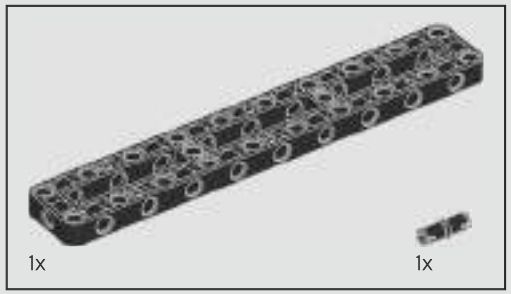

134

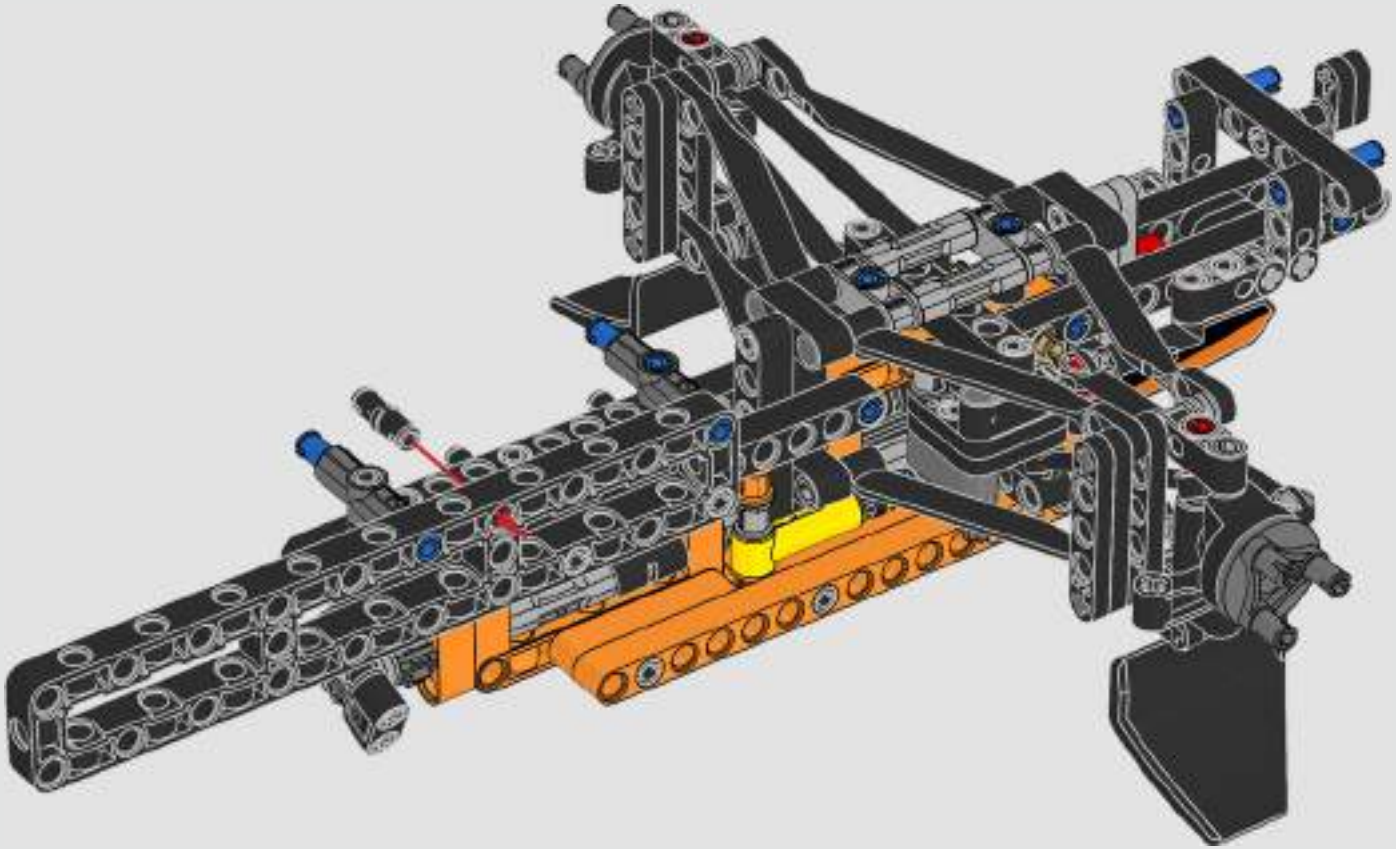

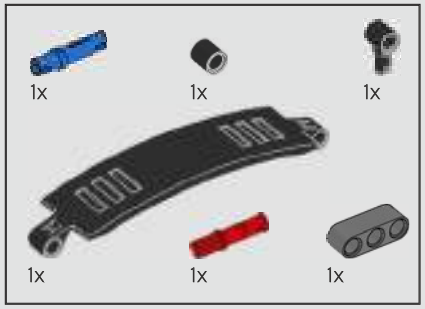

135

1

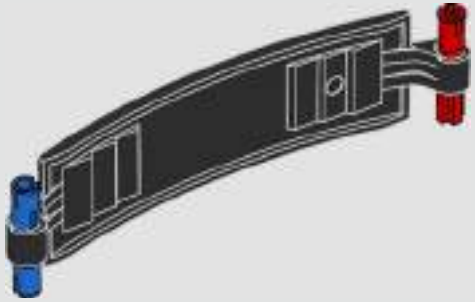

2

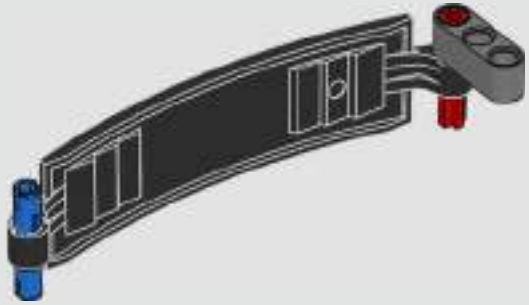

3

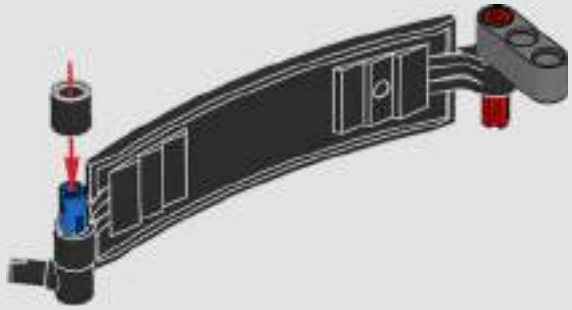

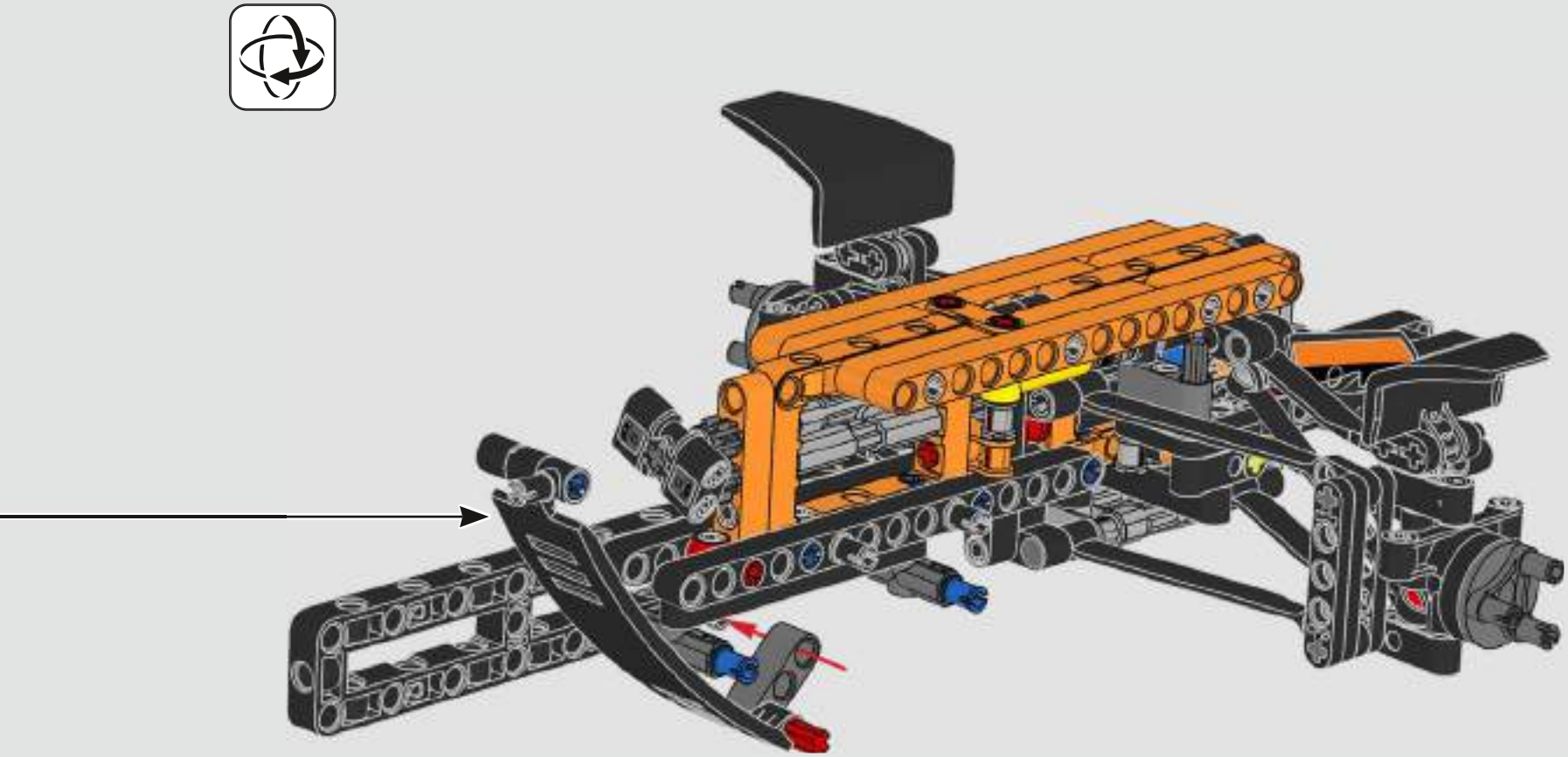

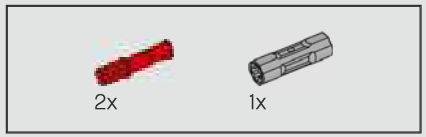

136

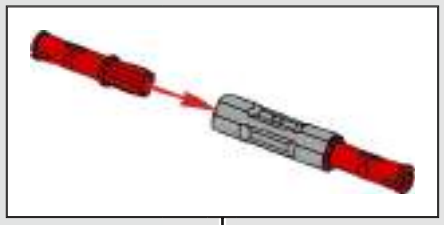

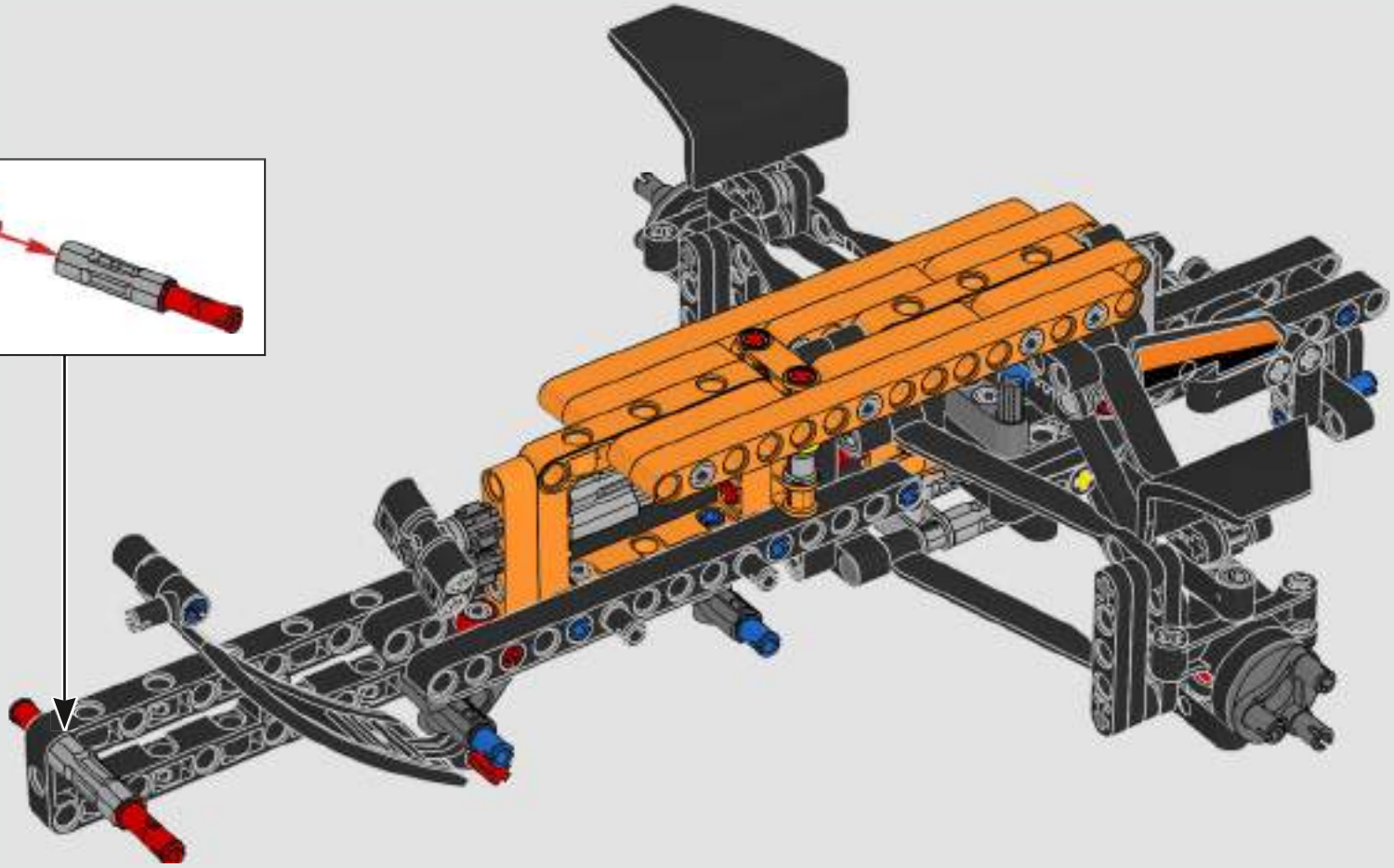

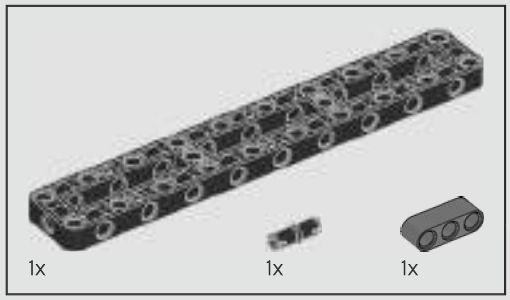

137

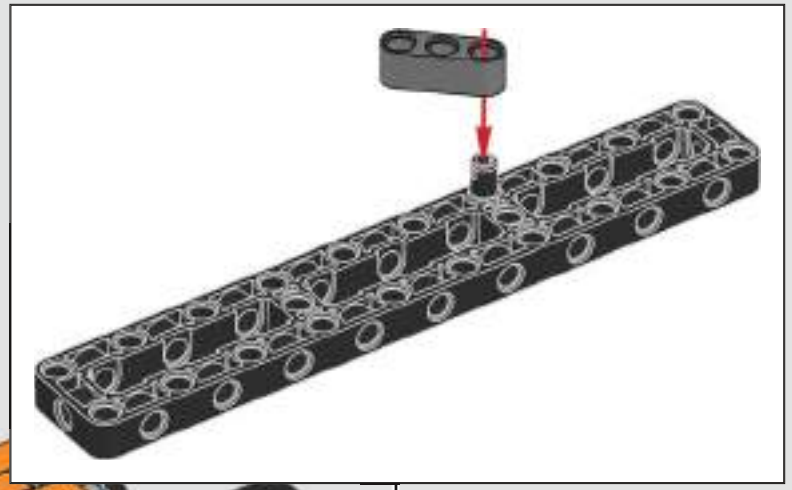

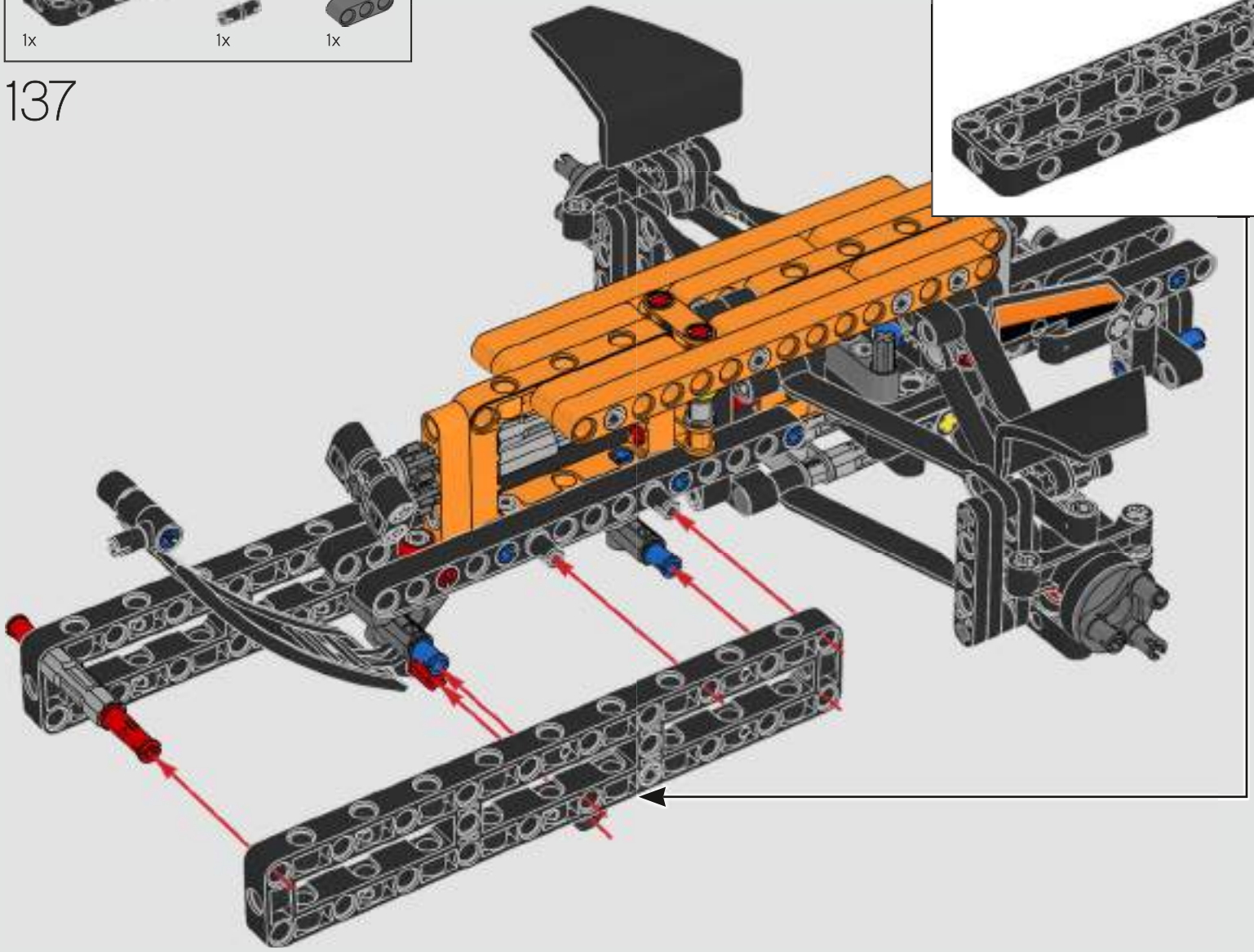

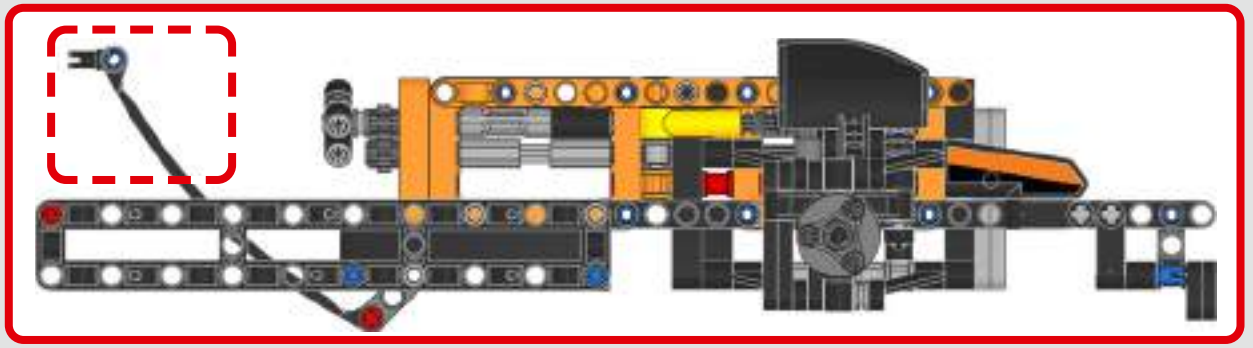

138

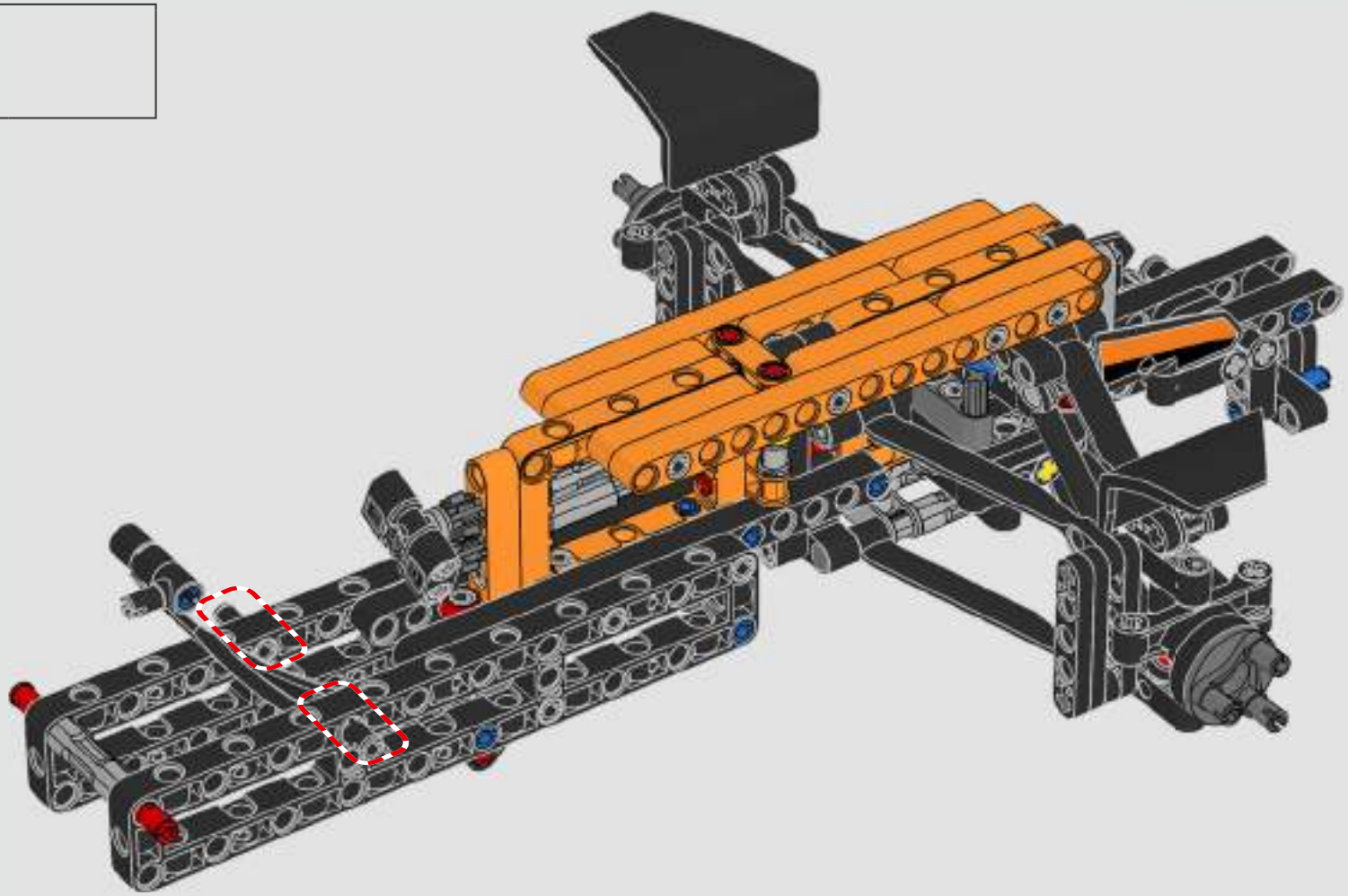

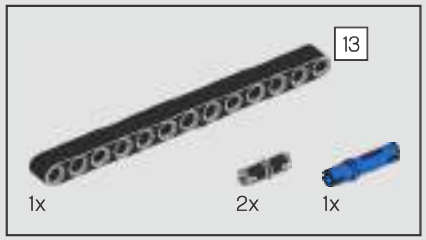

139

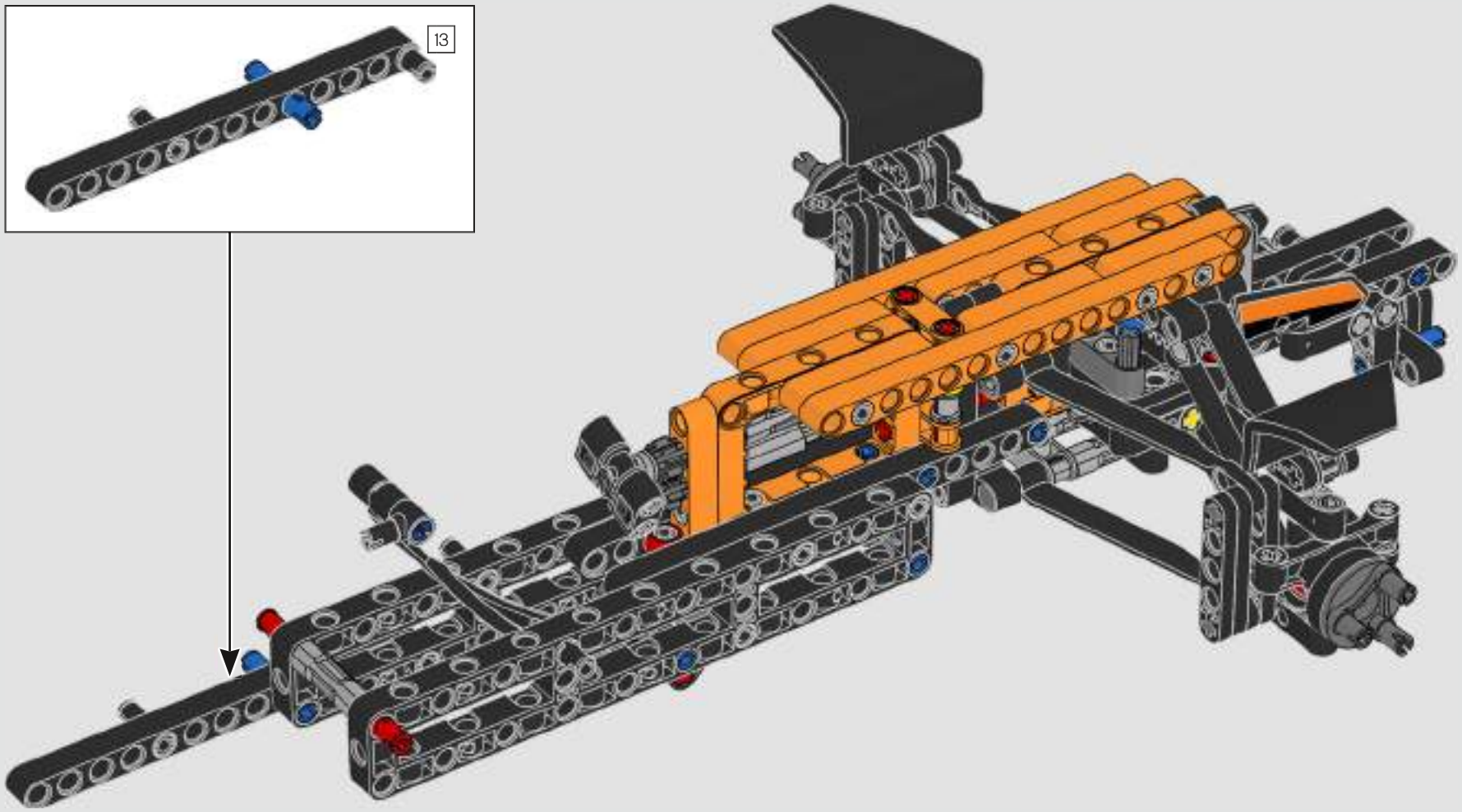

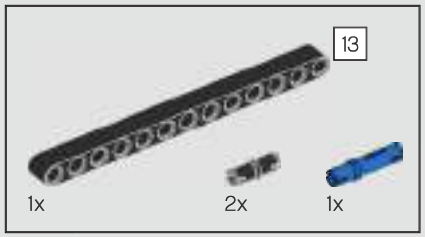

140

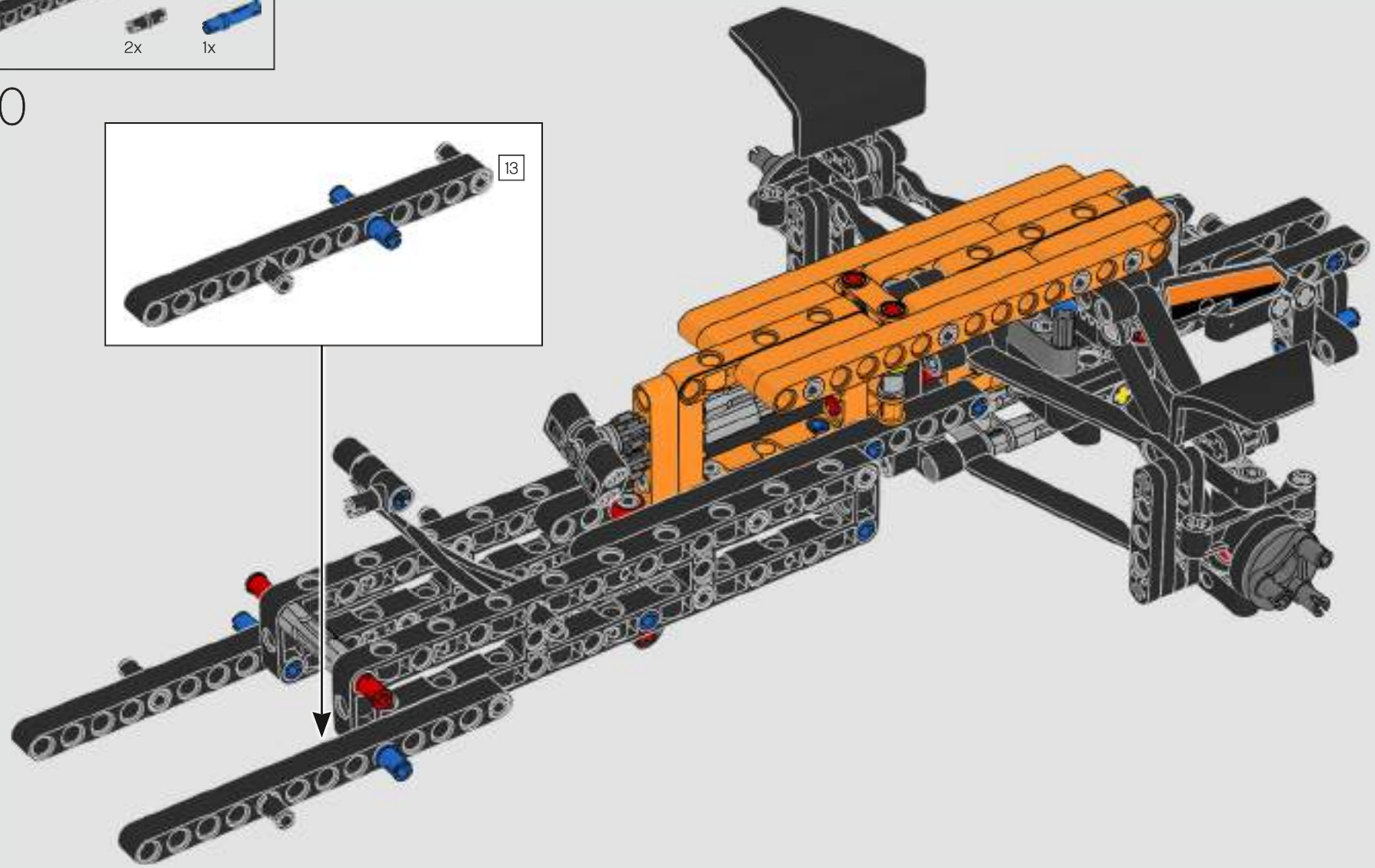

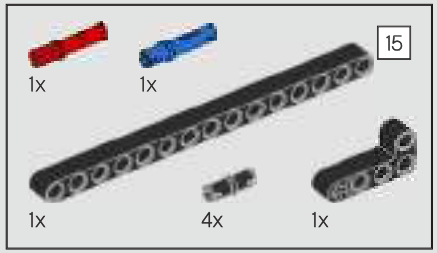

141

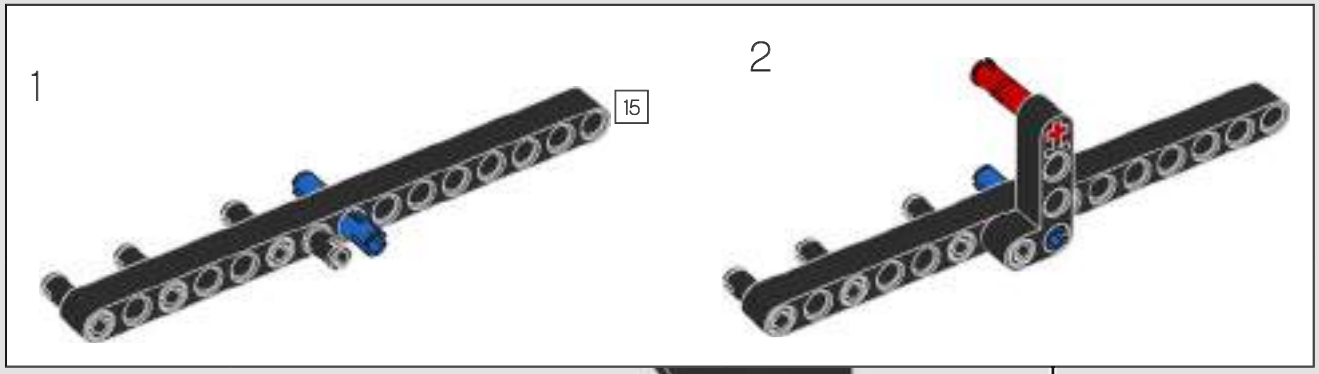

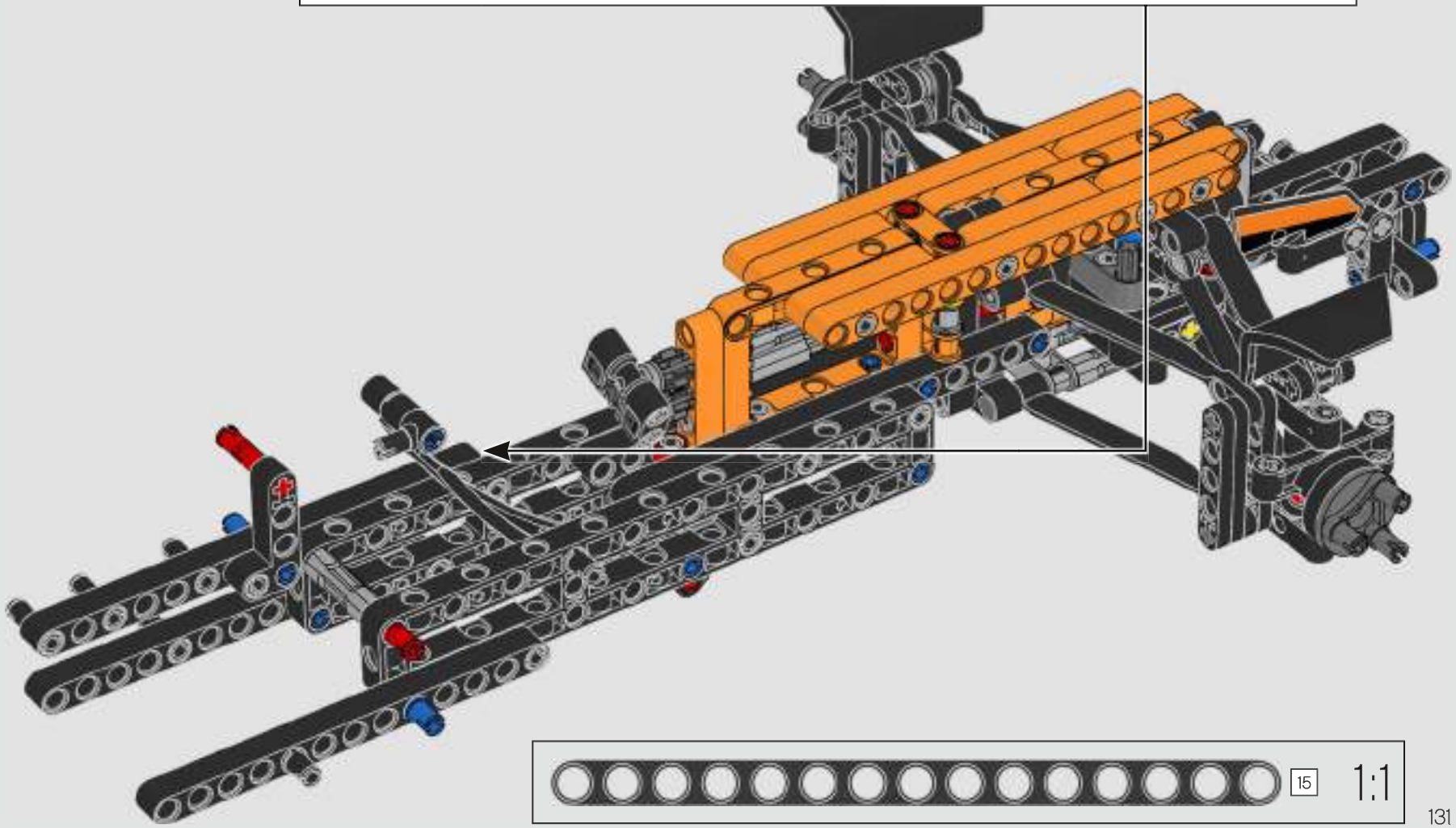

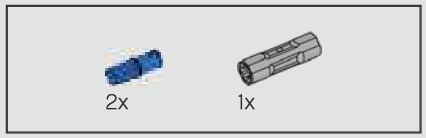

142

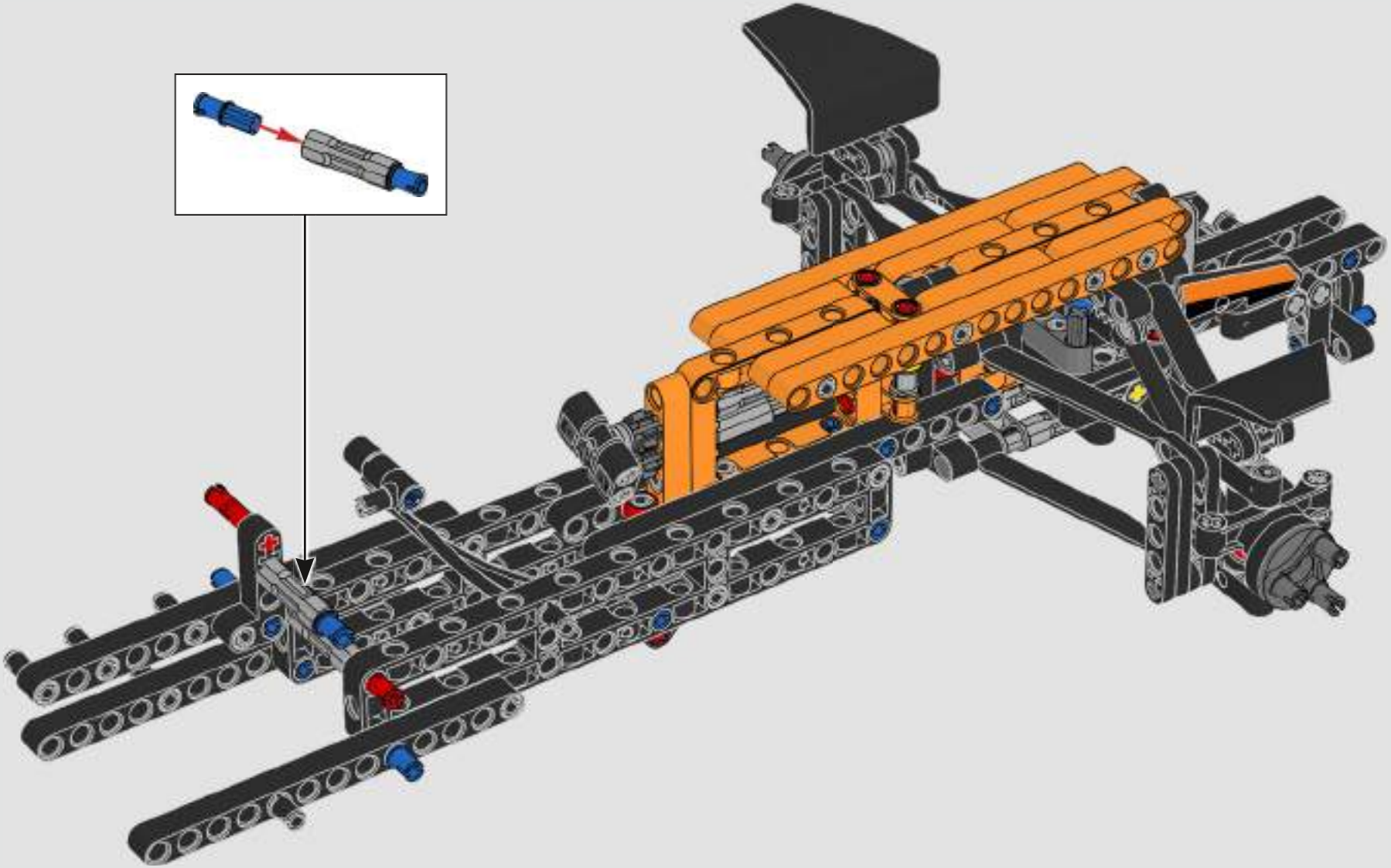

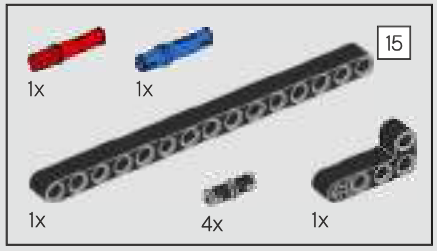

143

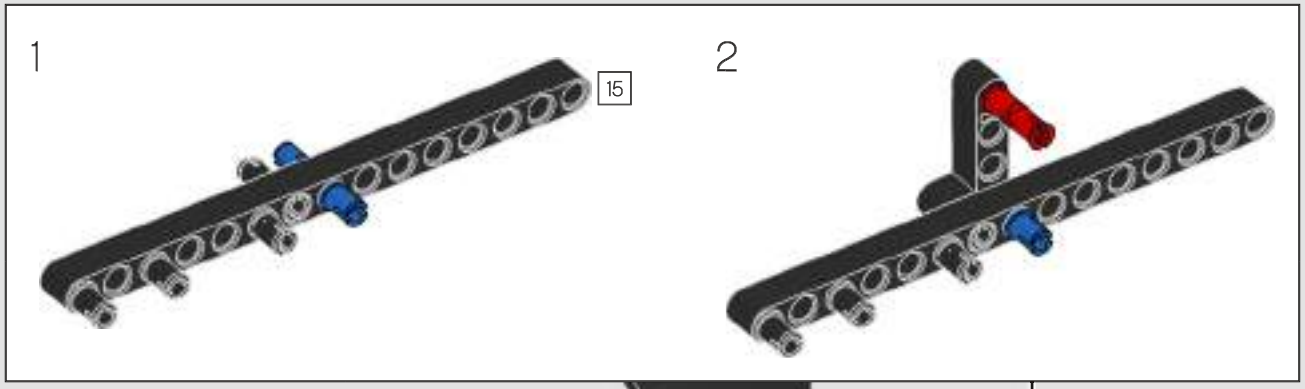

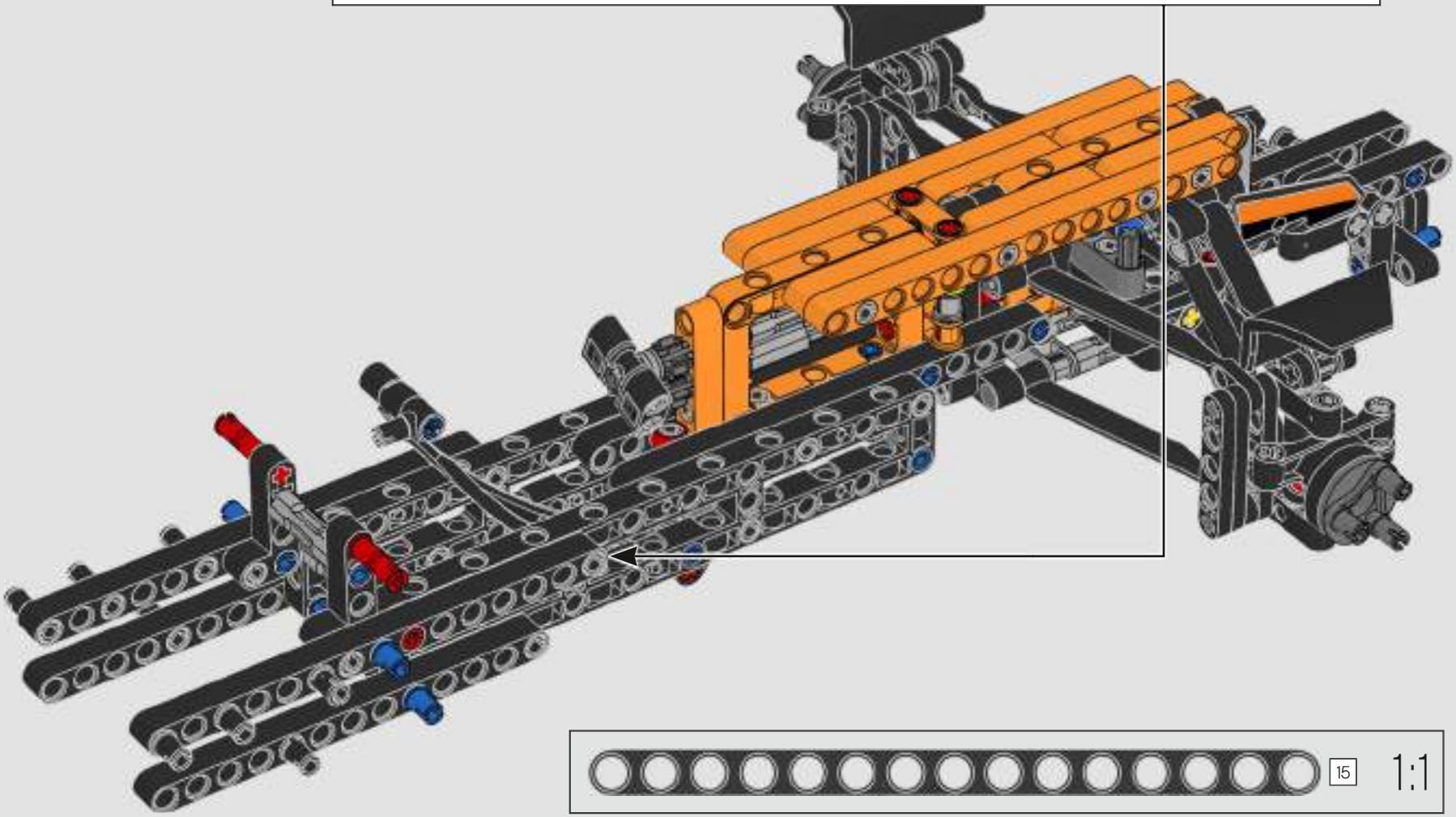

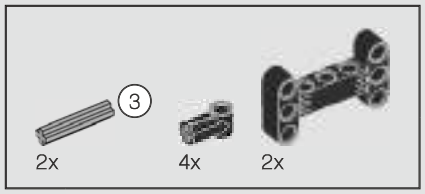

144

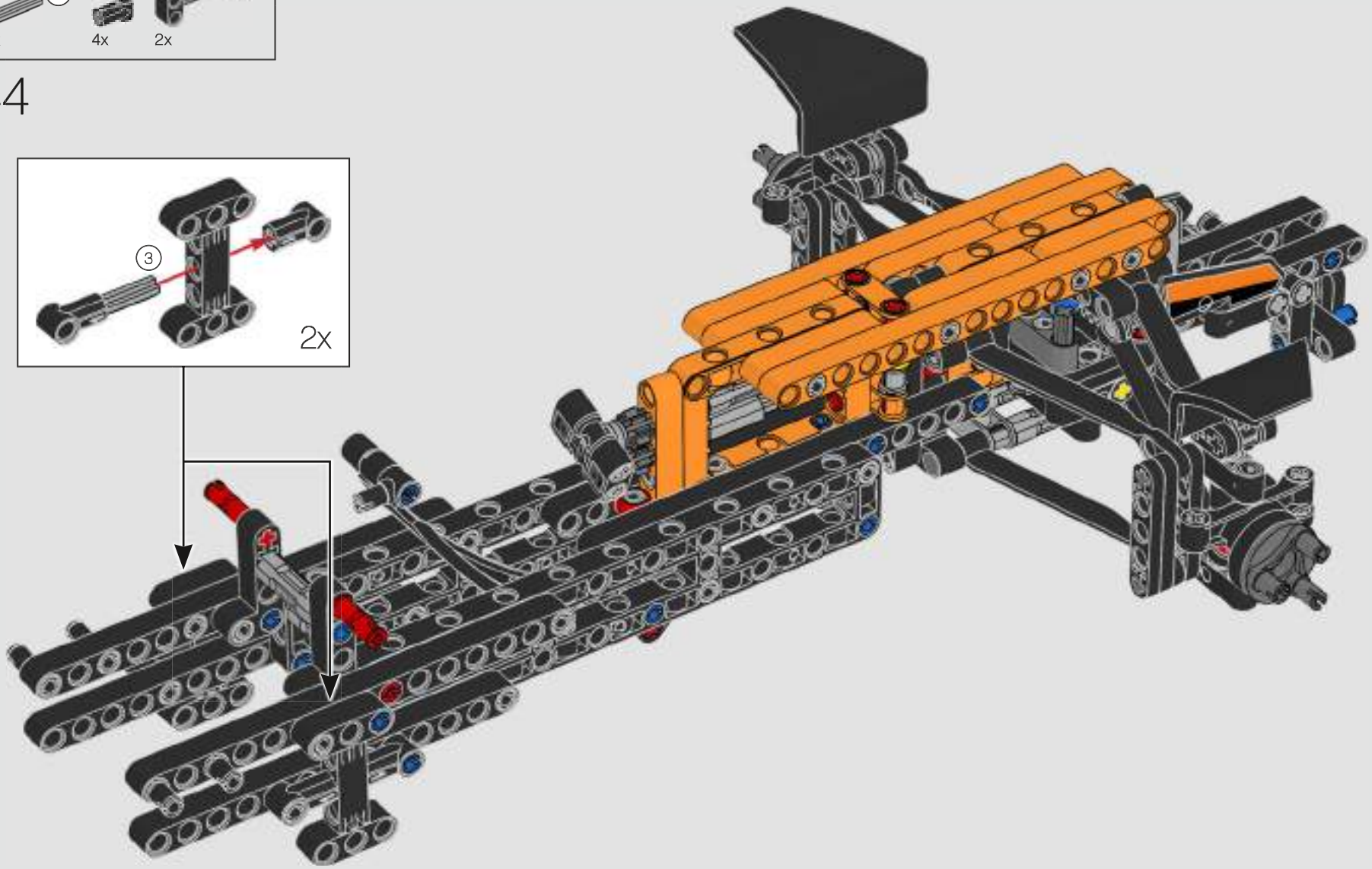

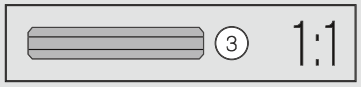

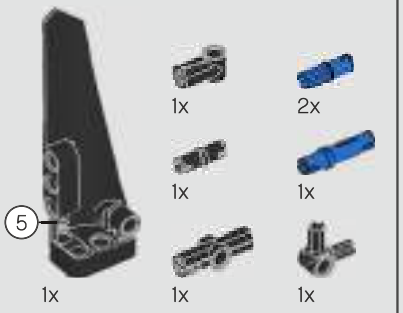

145

1

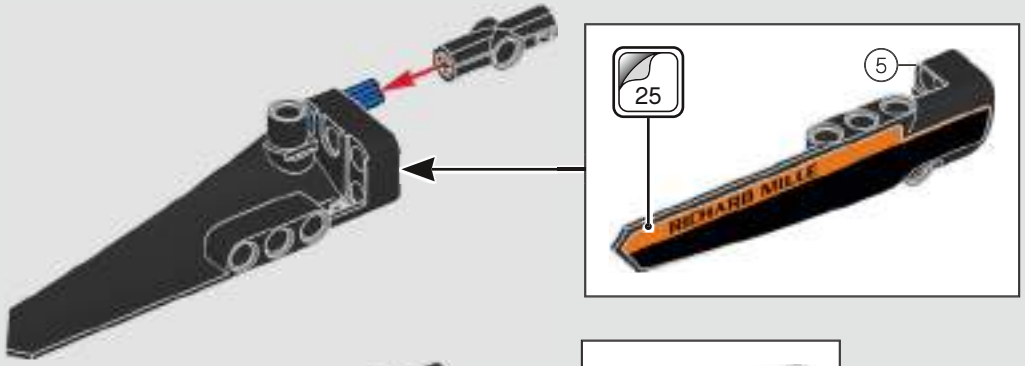

2

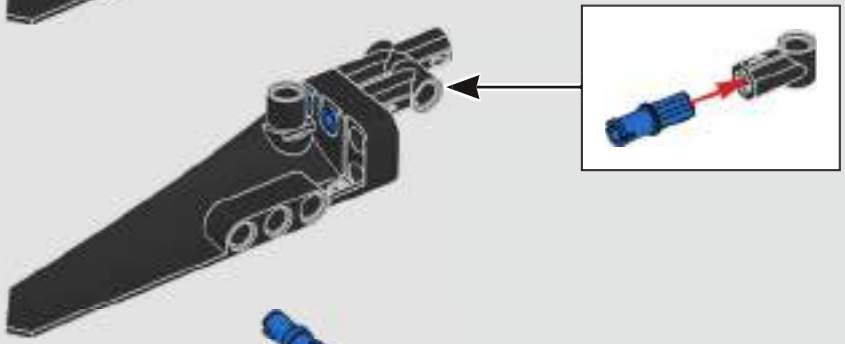

3

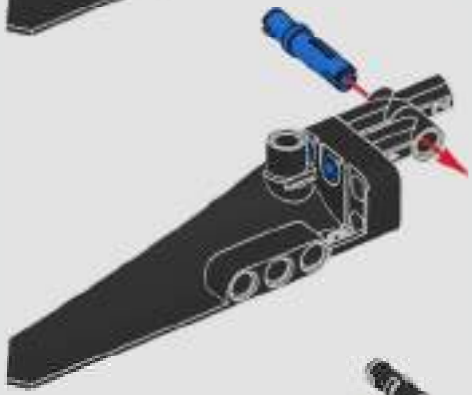

4

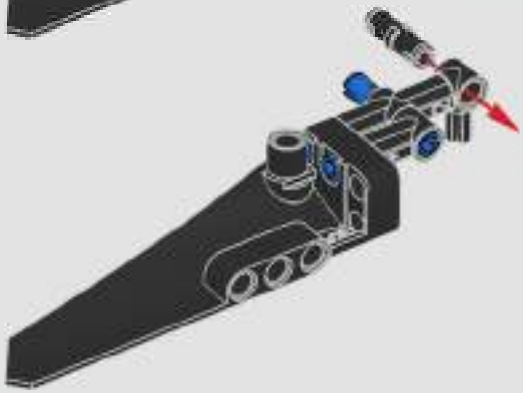

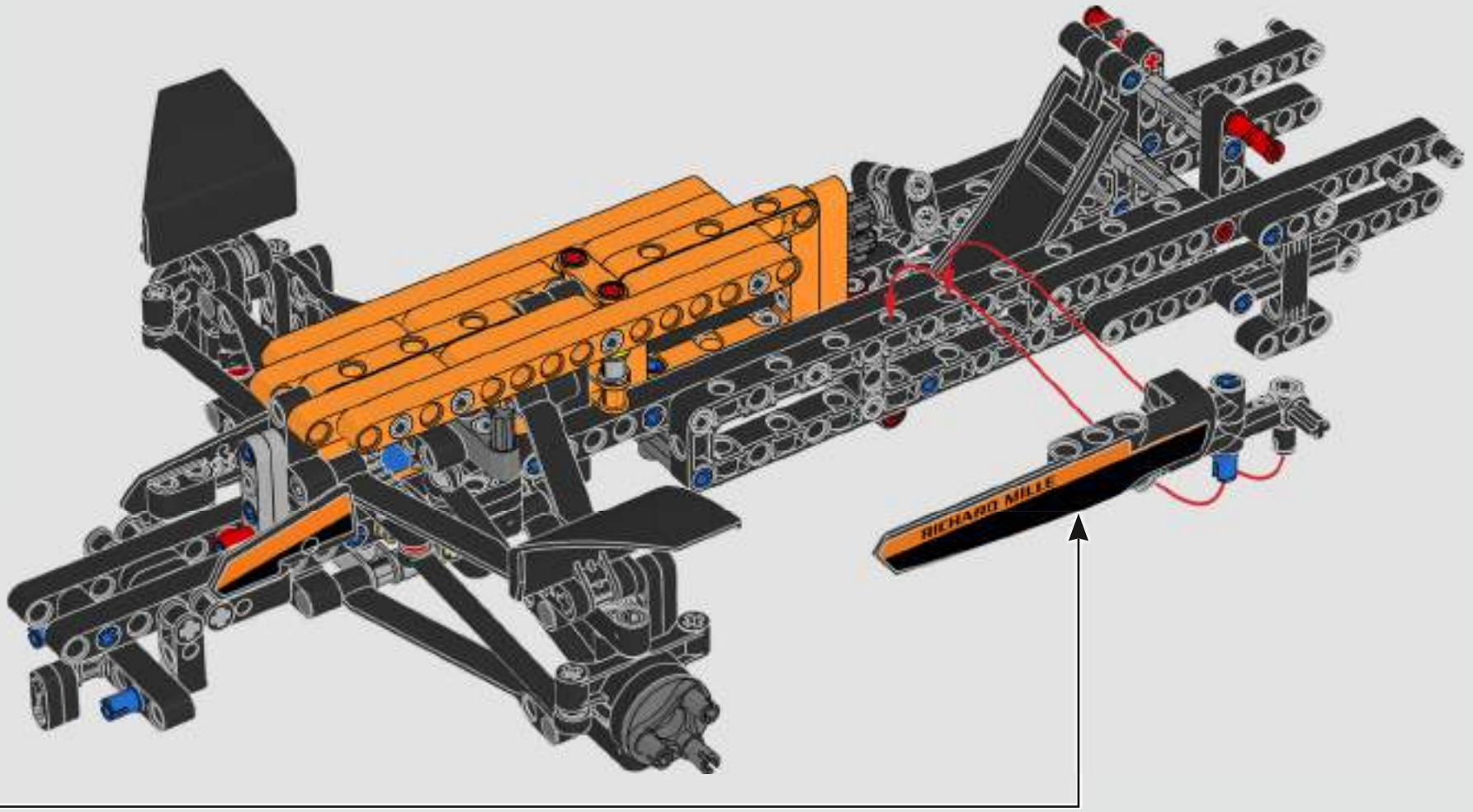
RICHARD MILLE

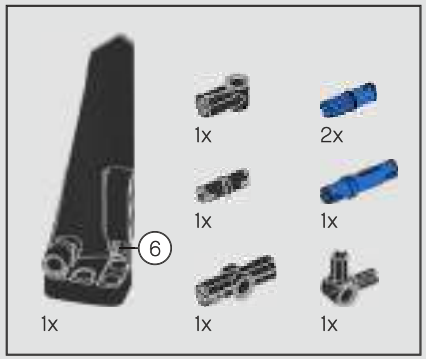

146

1

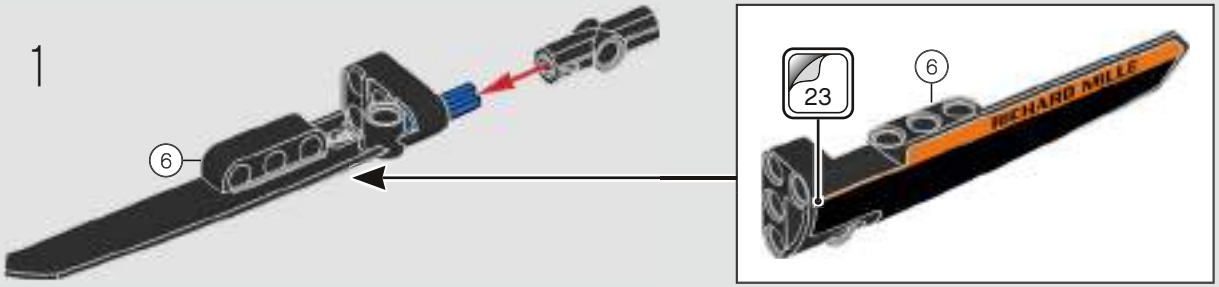

2

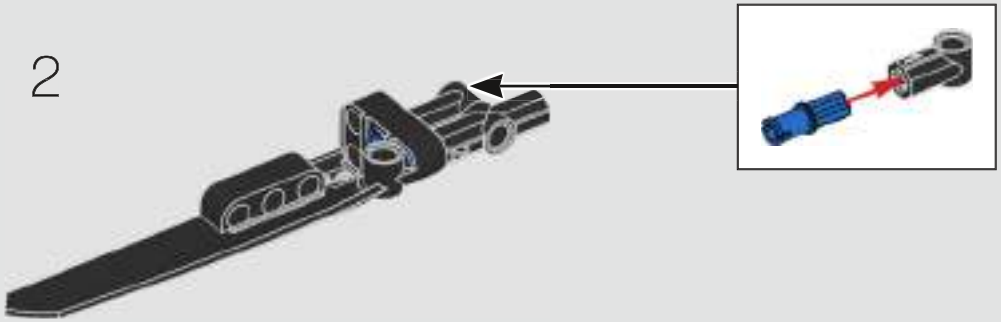

3

4

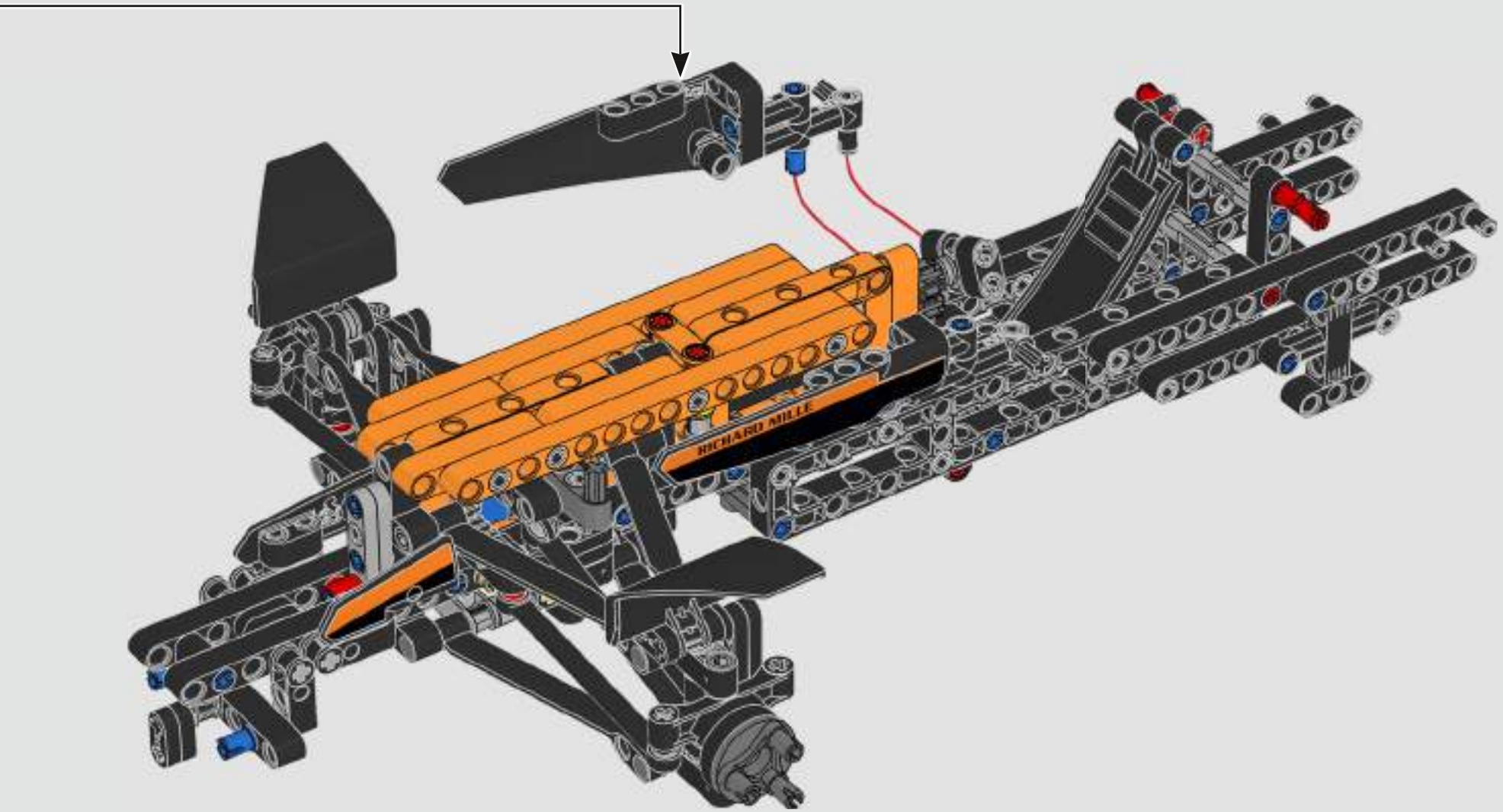
RICHARD MILLE

147

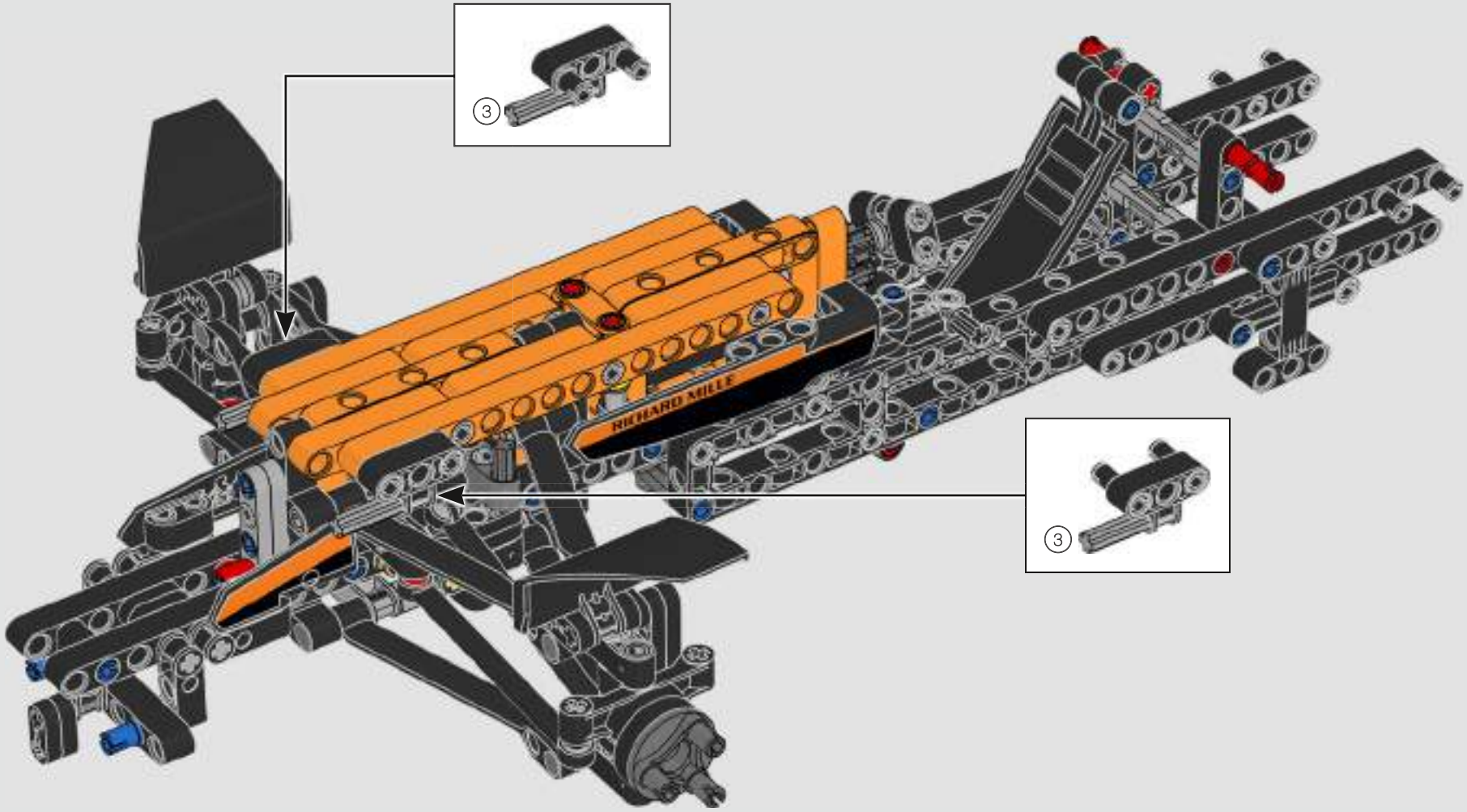

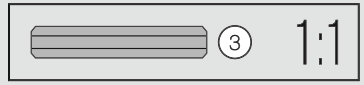

2x

1:1

148

2x

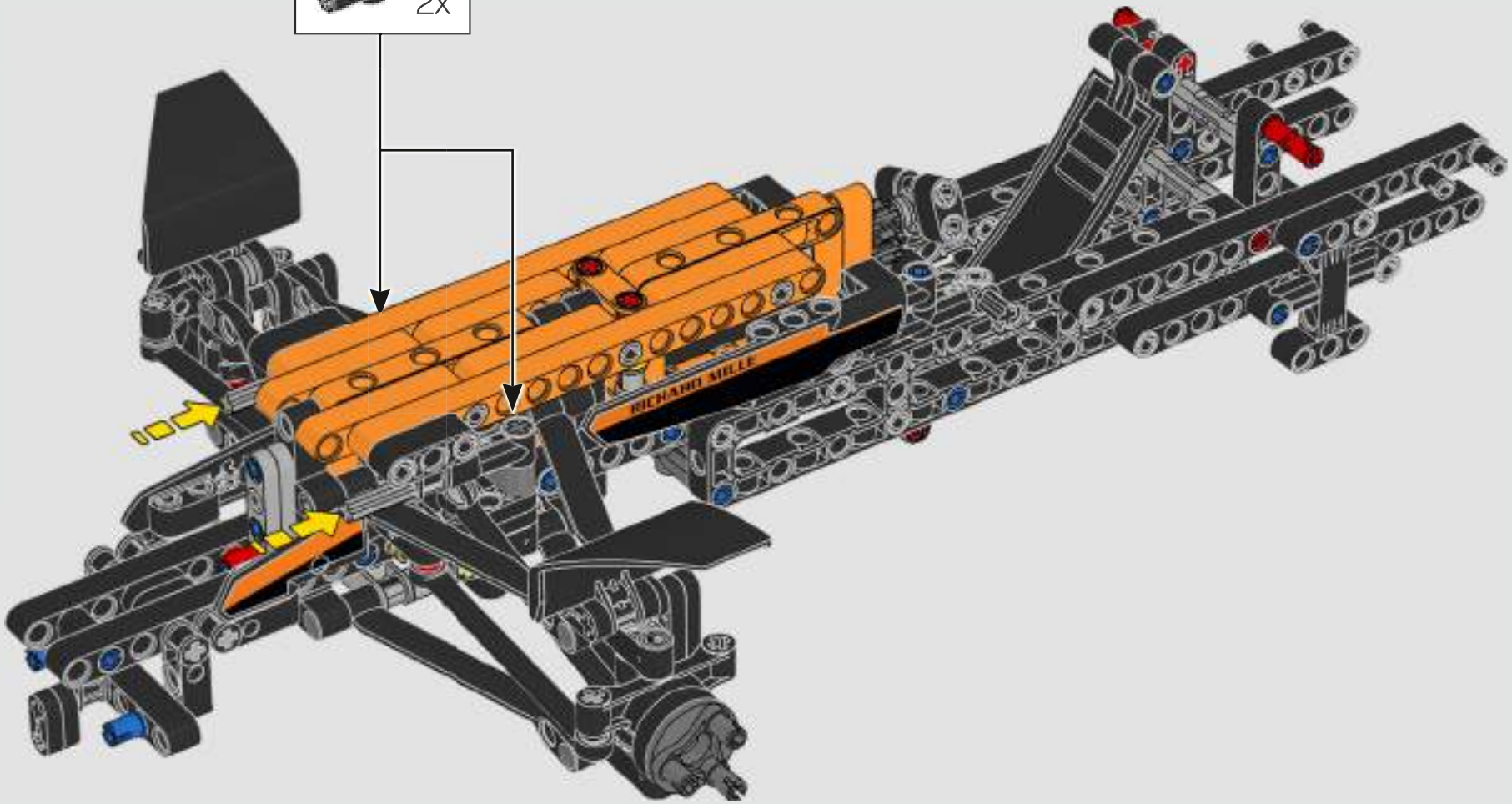

149

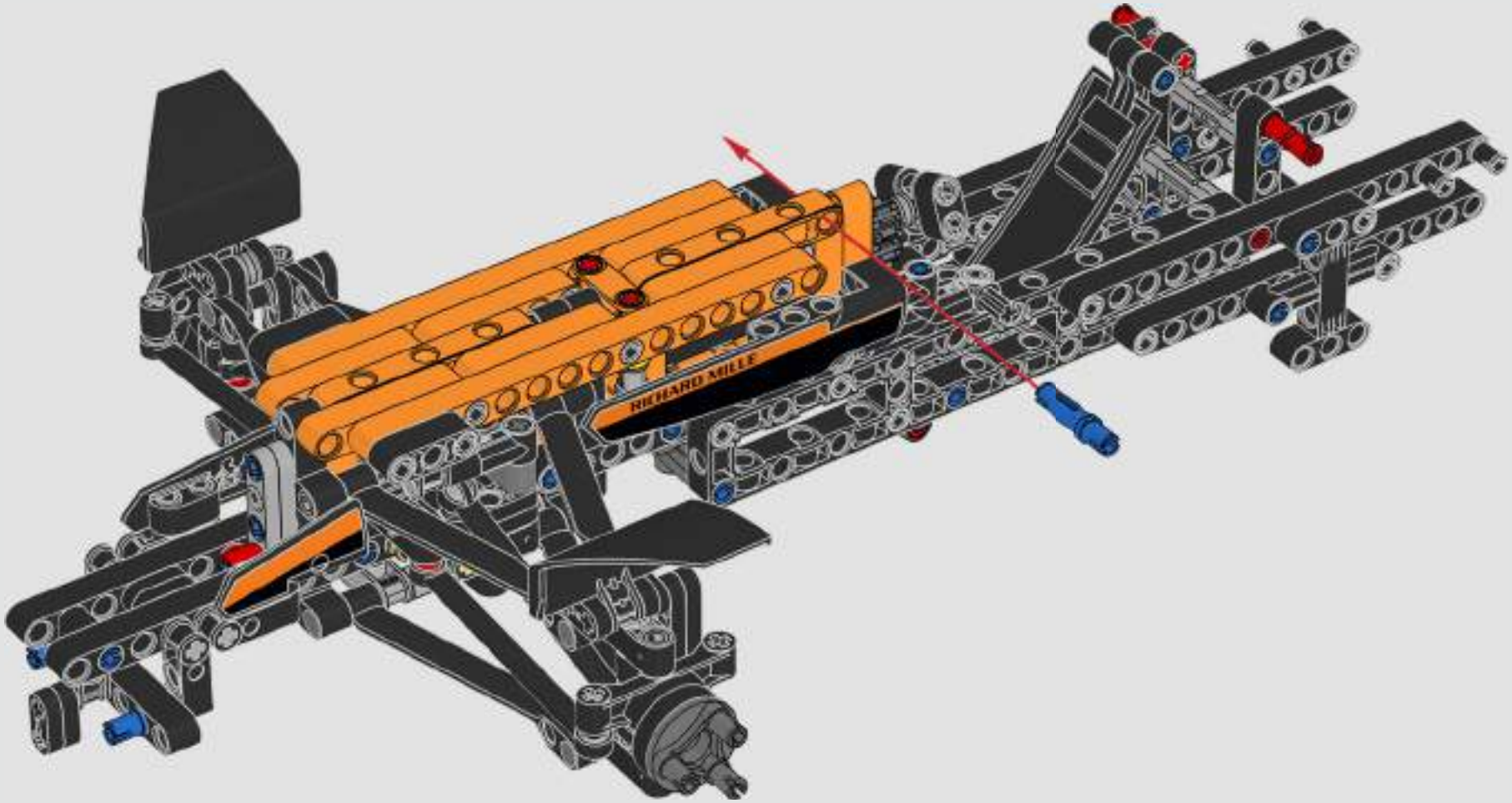

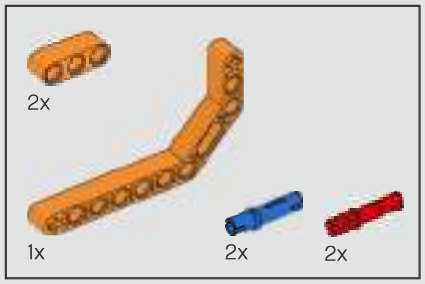

150

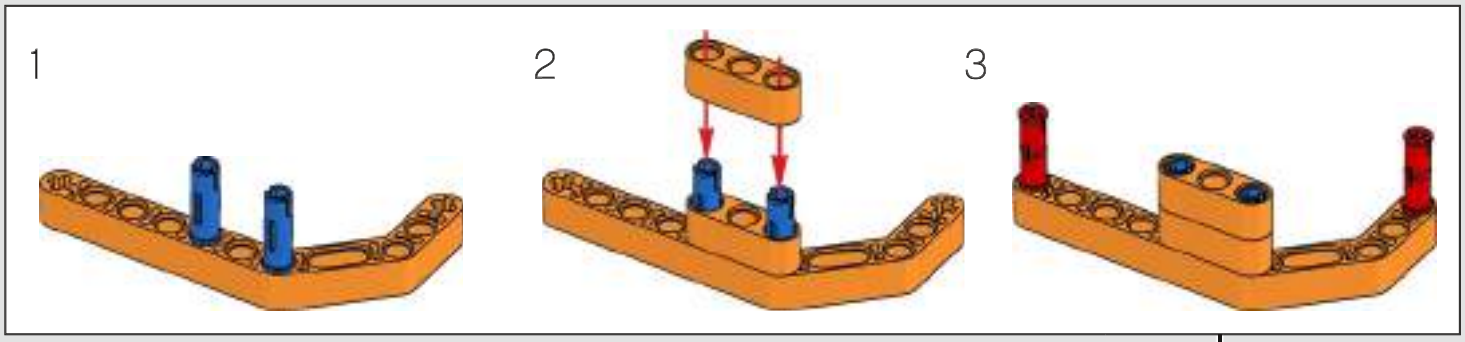

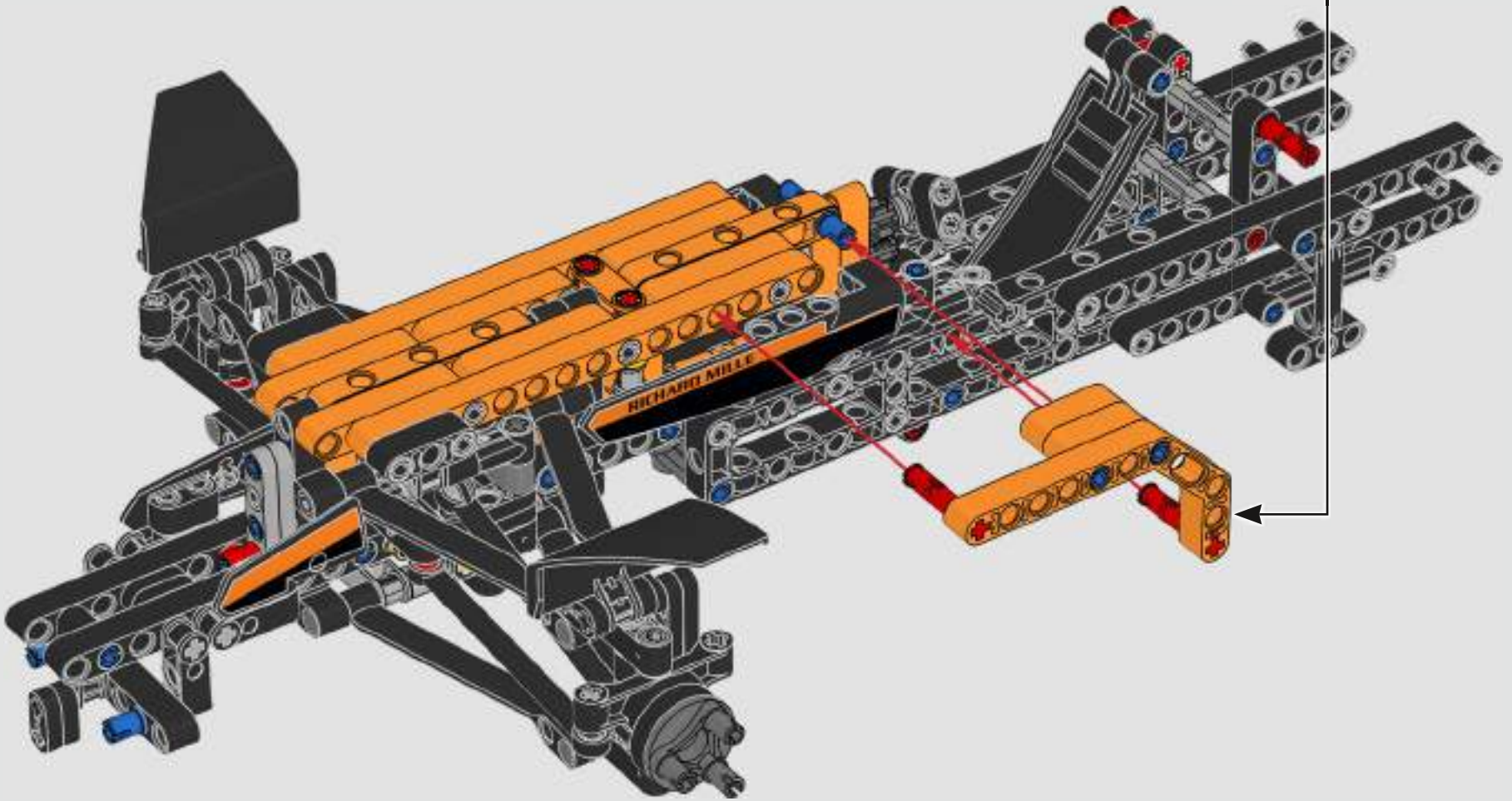

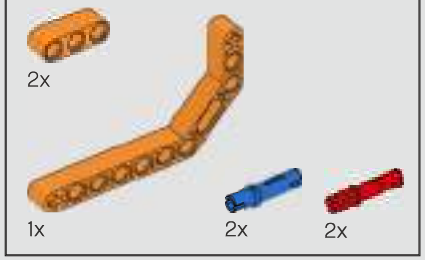

151

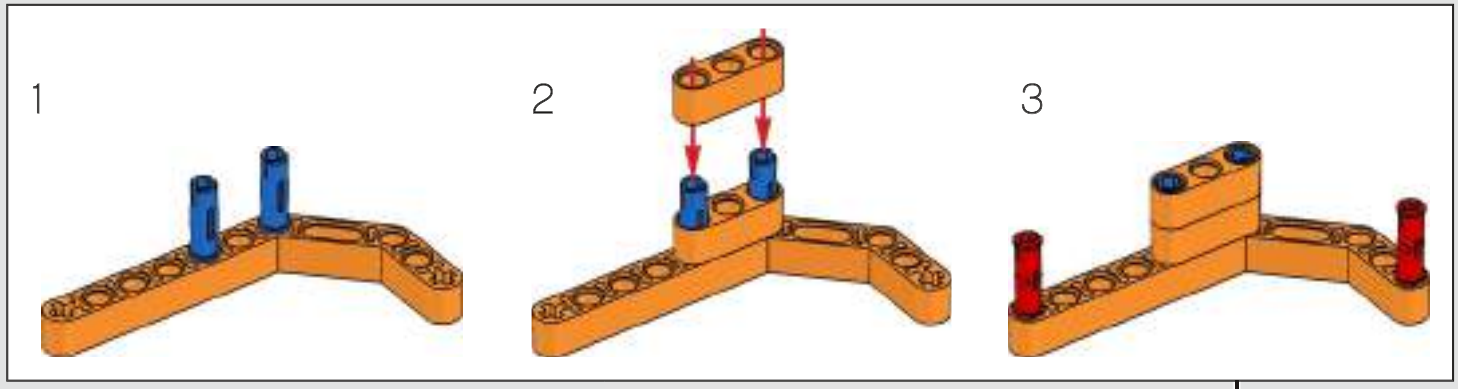

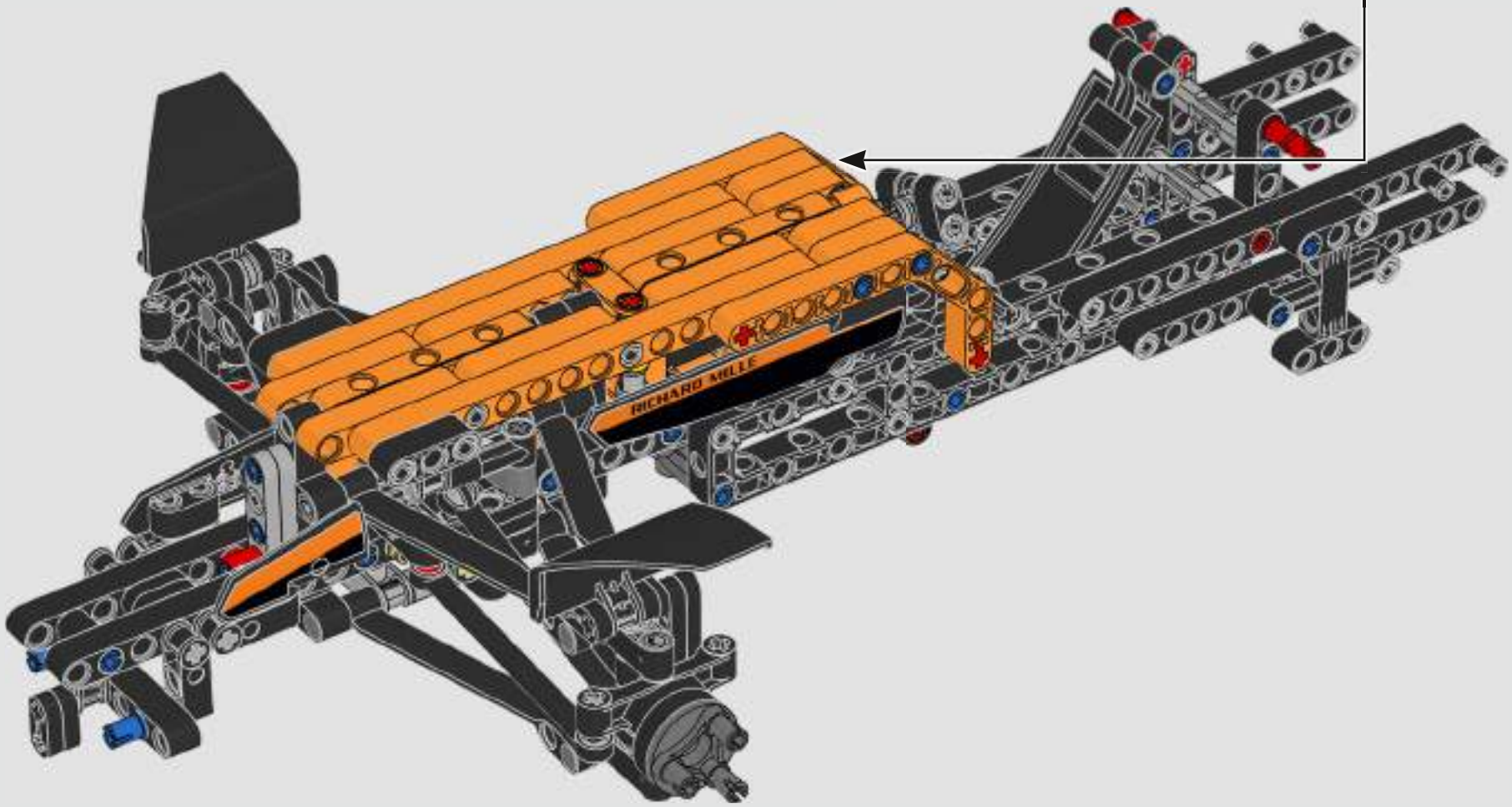

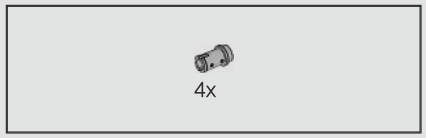

152

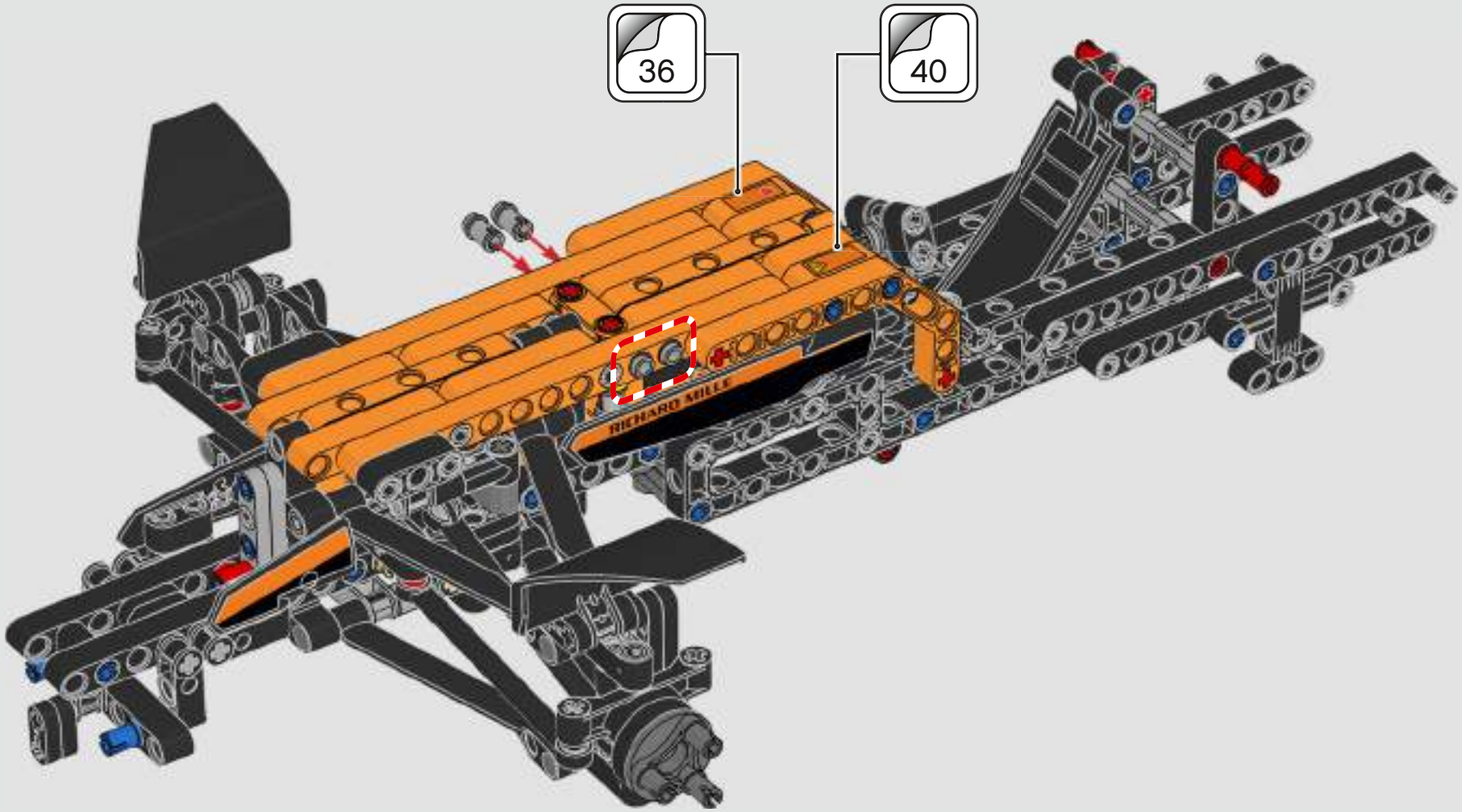

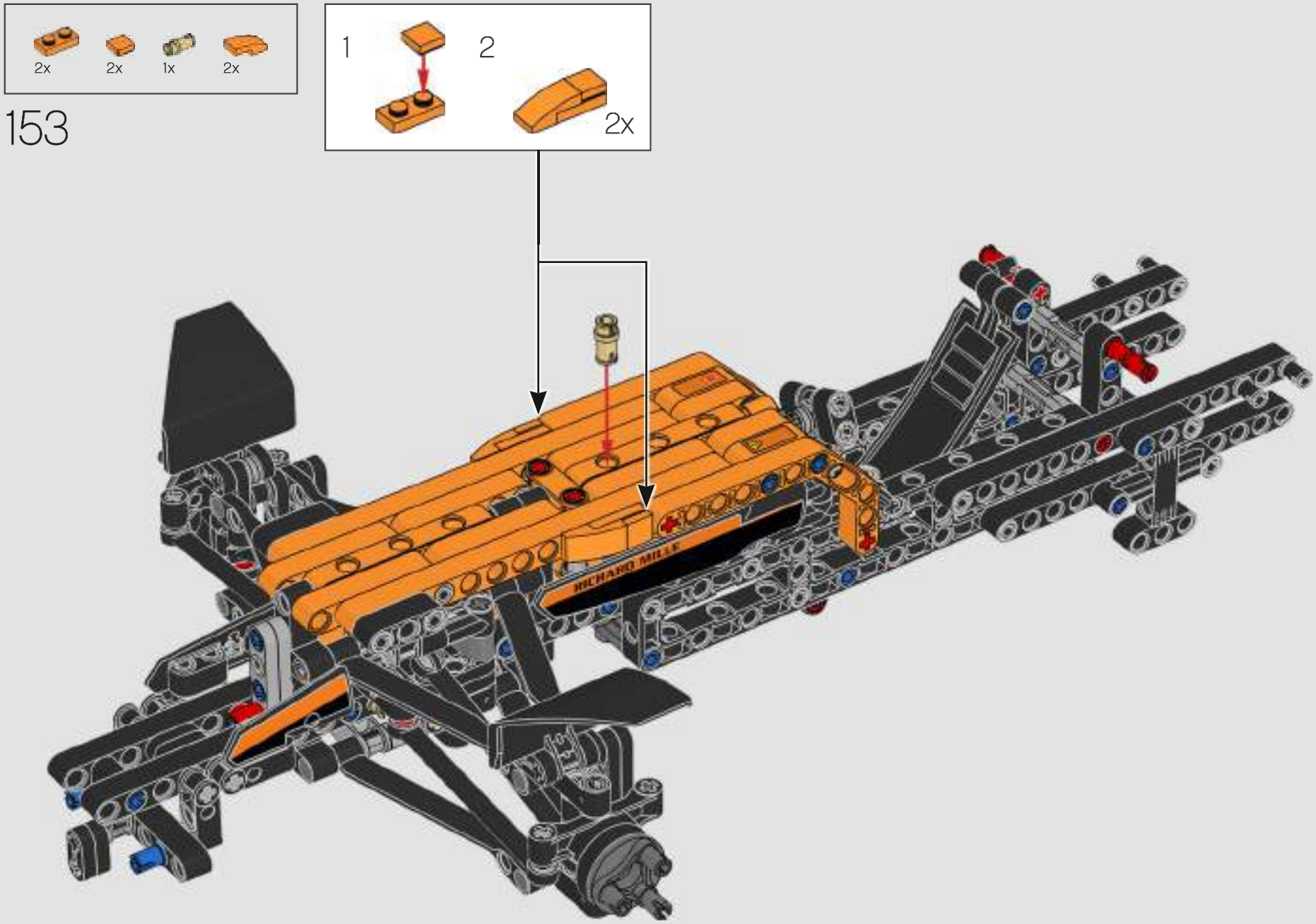
2x
2x
1x
2x
153
1
2
2x

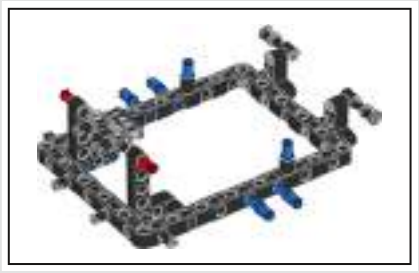

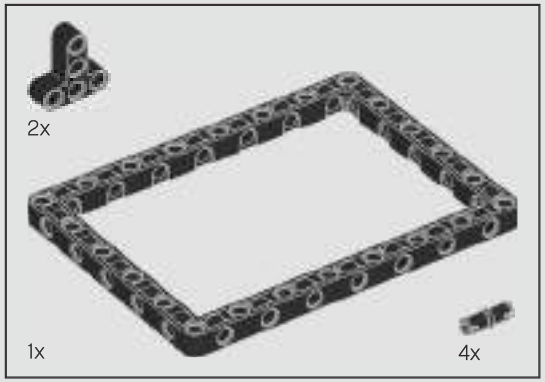

154

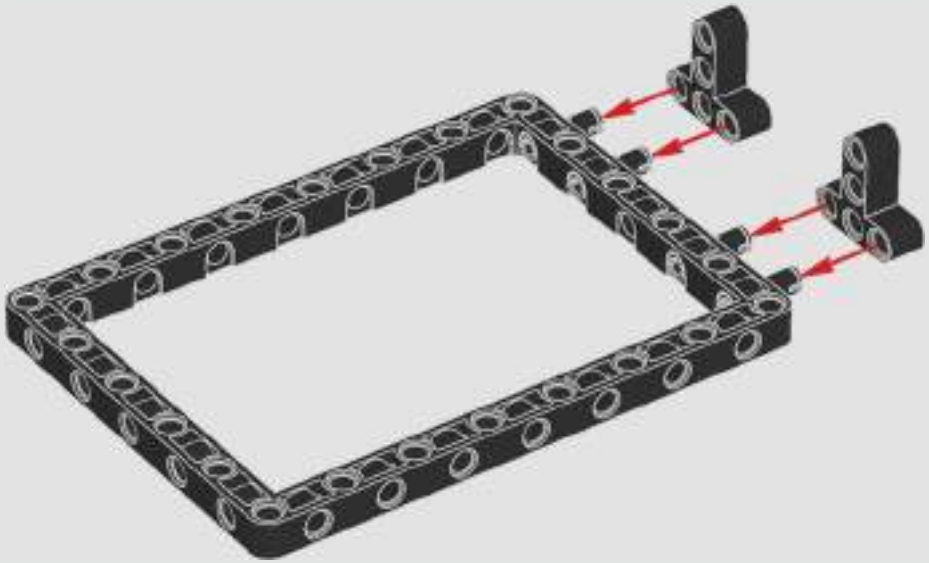

155

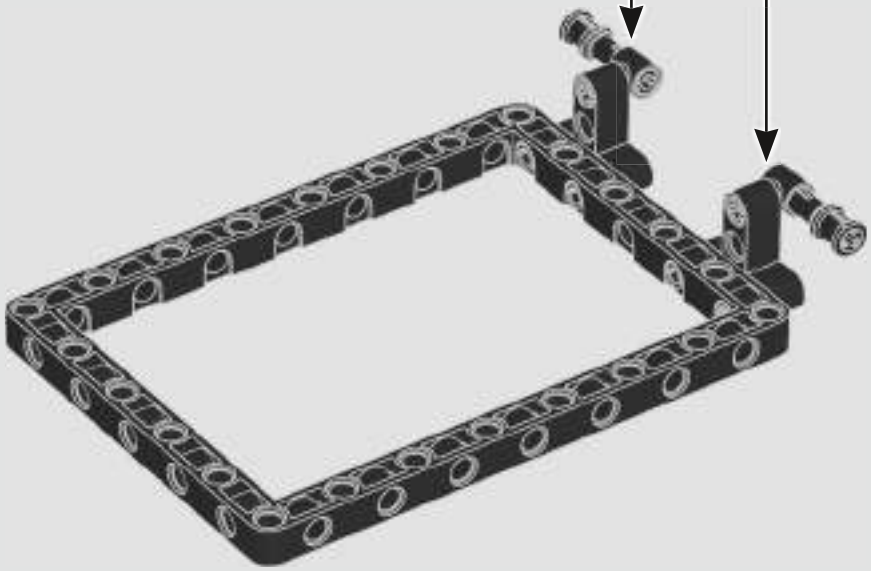

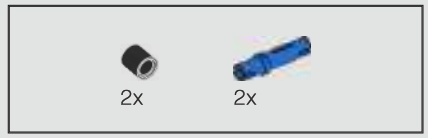

156

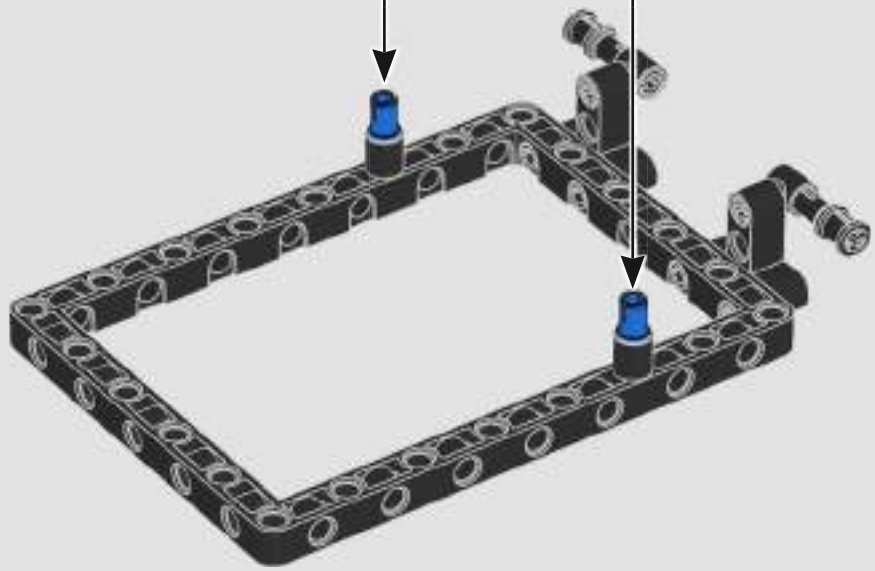

157

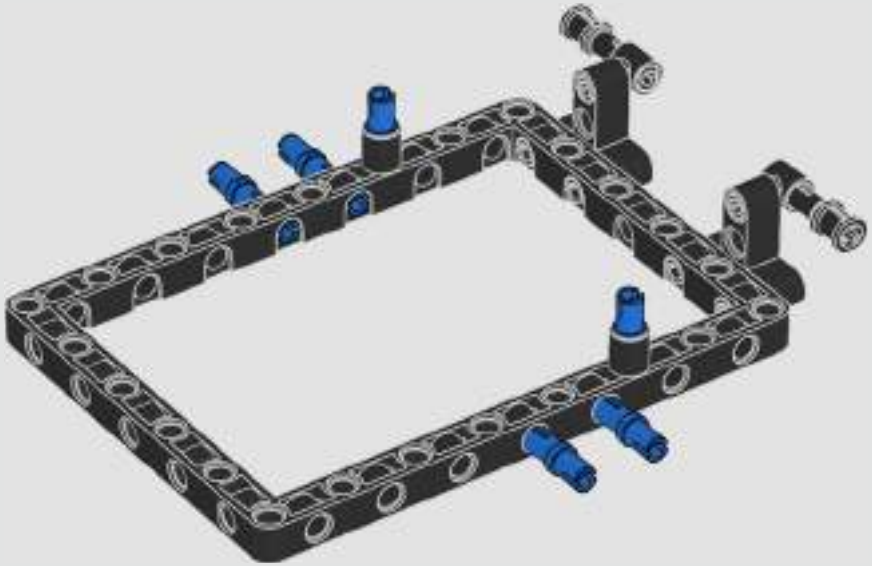

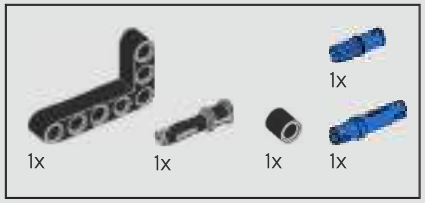

158

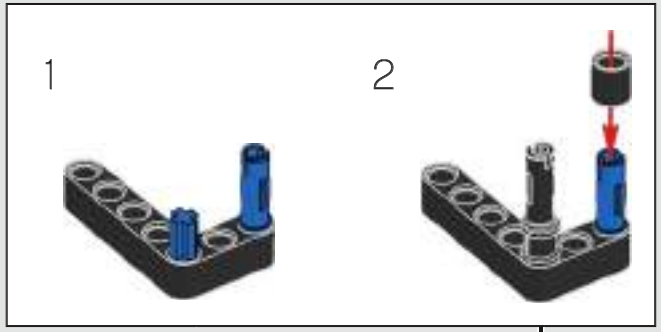

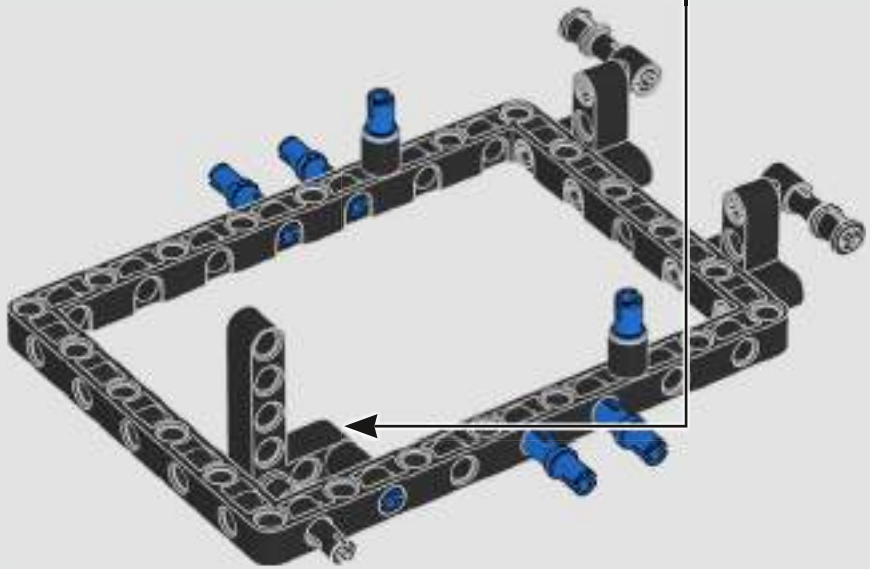

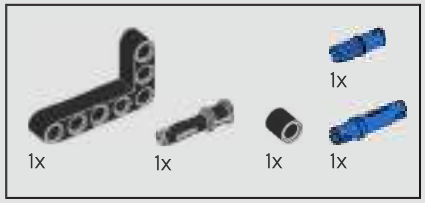

159

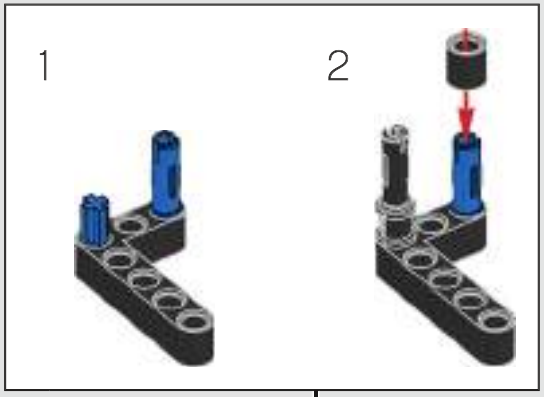

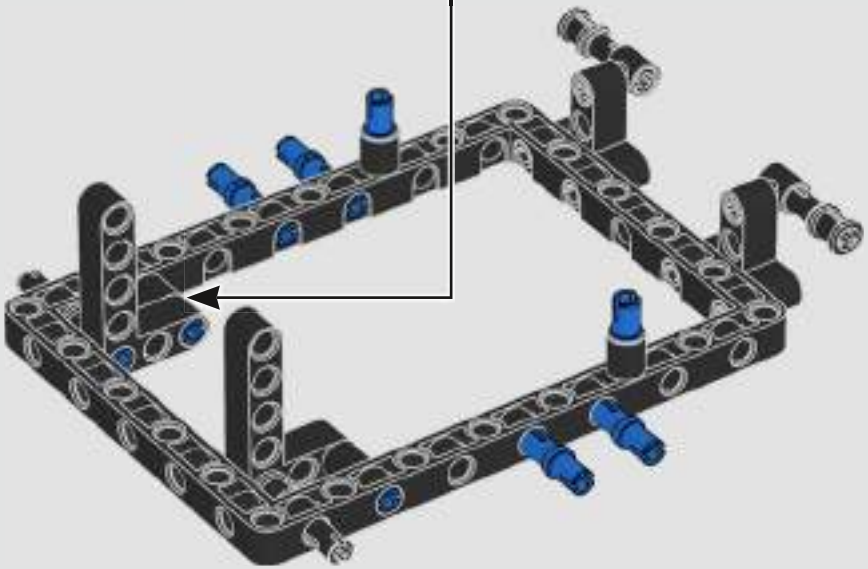

160

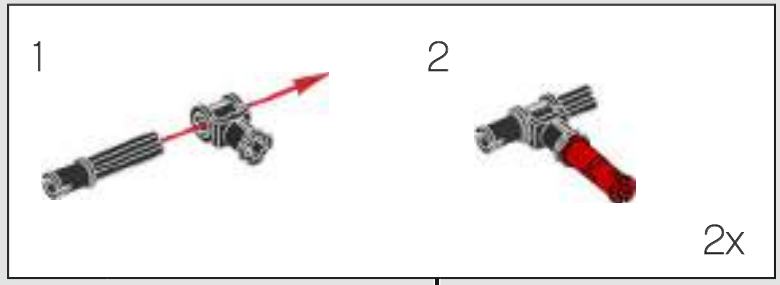

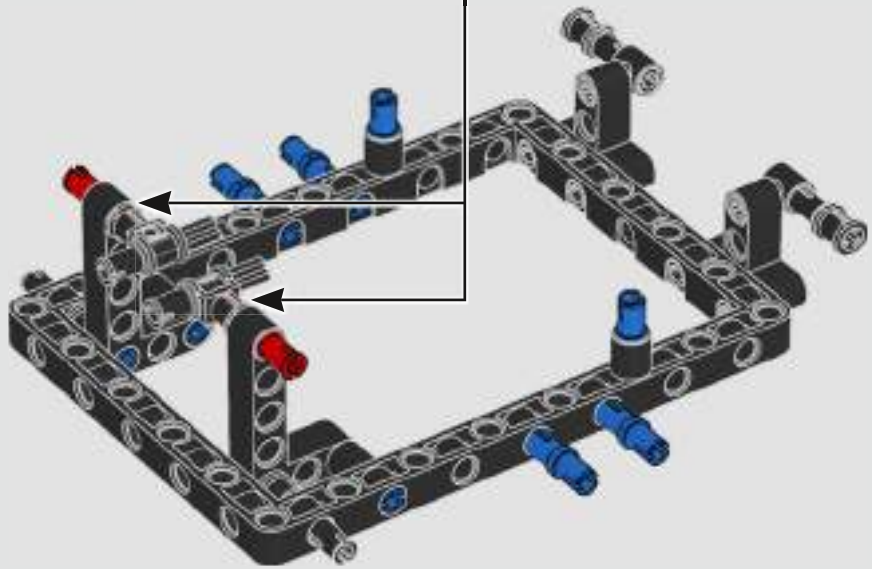

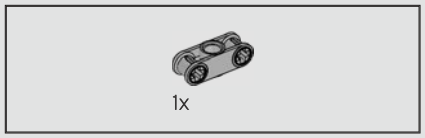

161

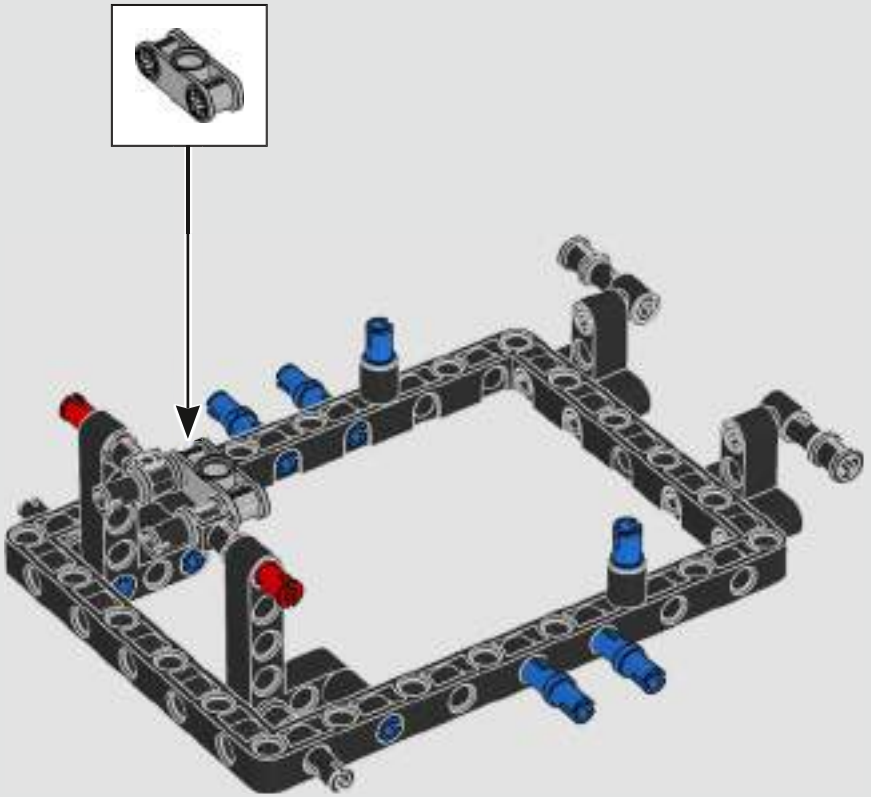

2x

162

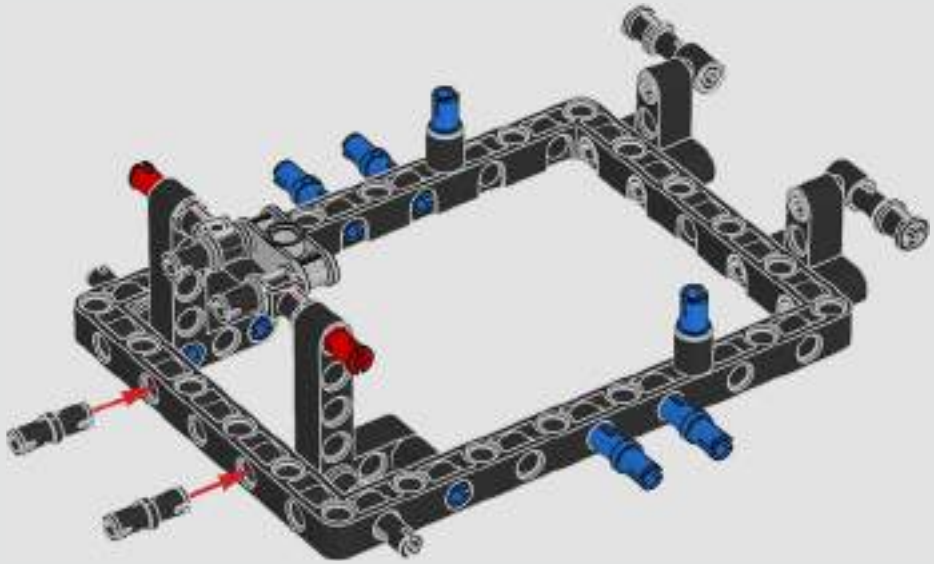

163

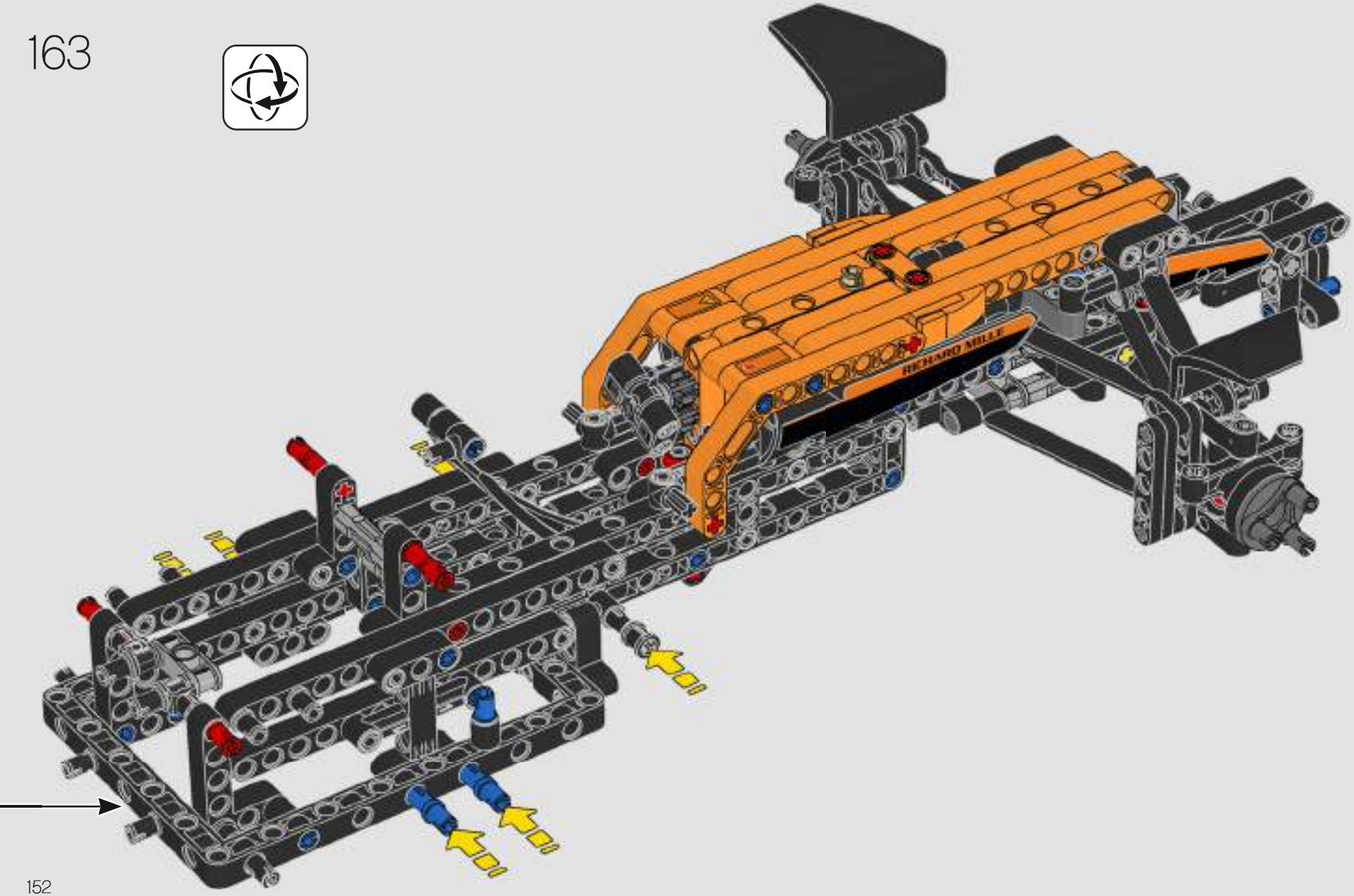

2x

164

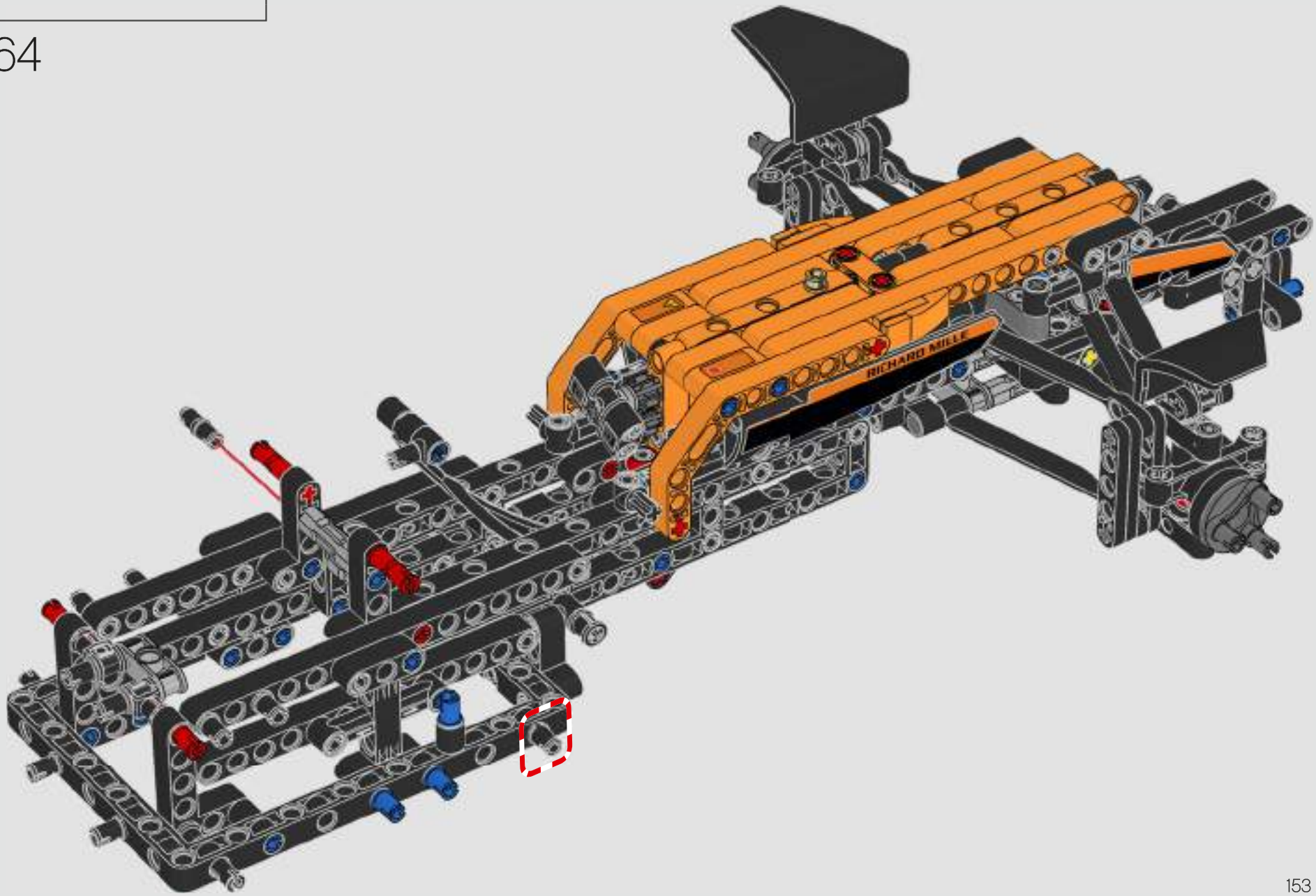

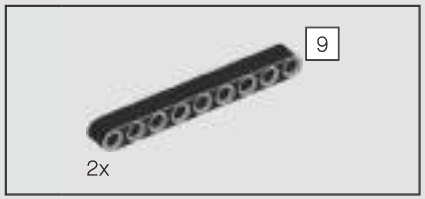

165

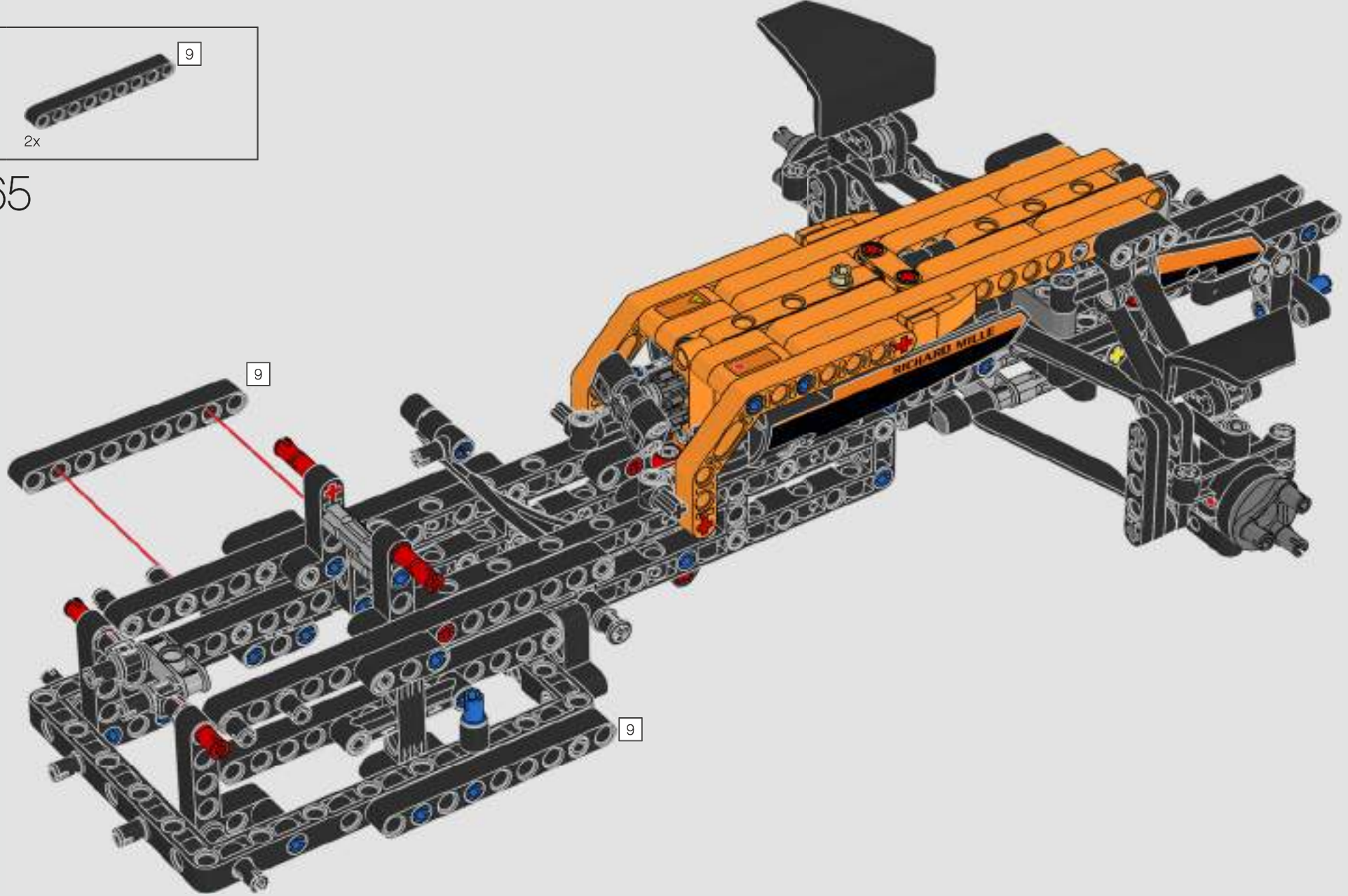

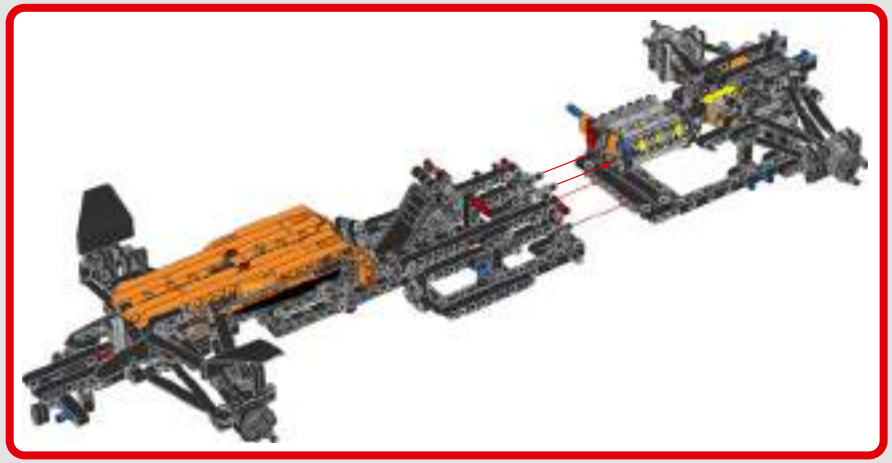

166

6x

167

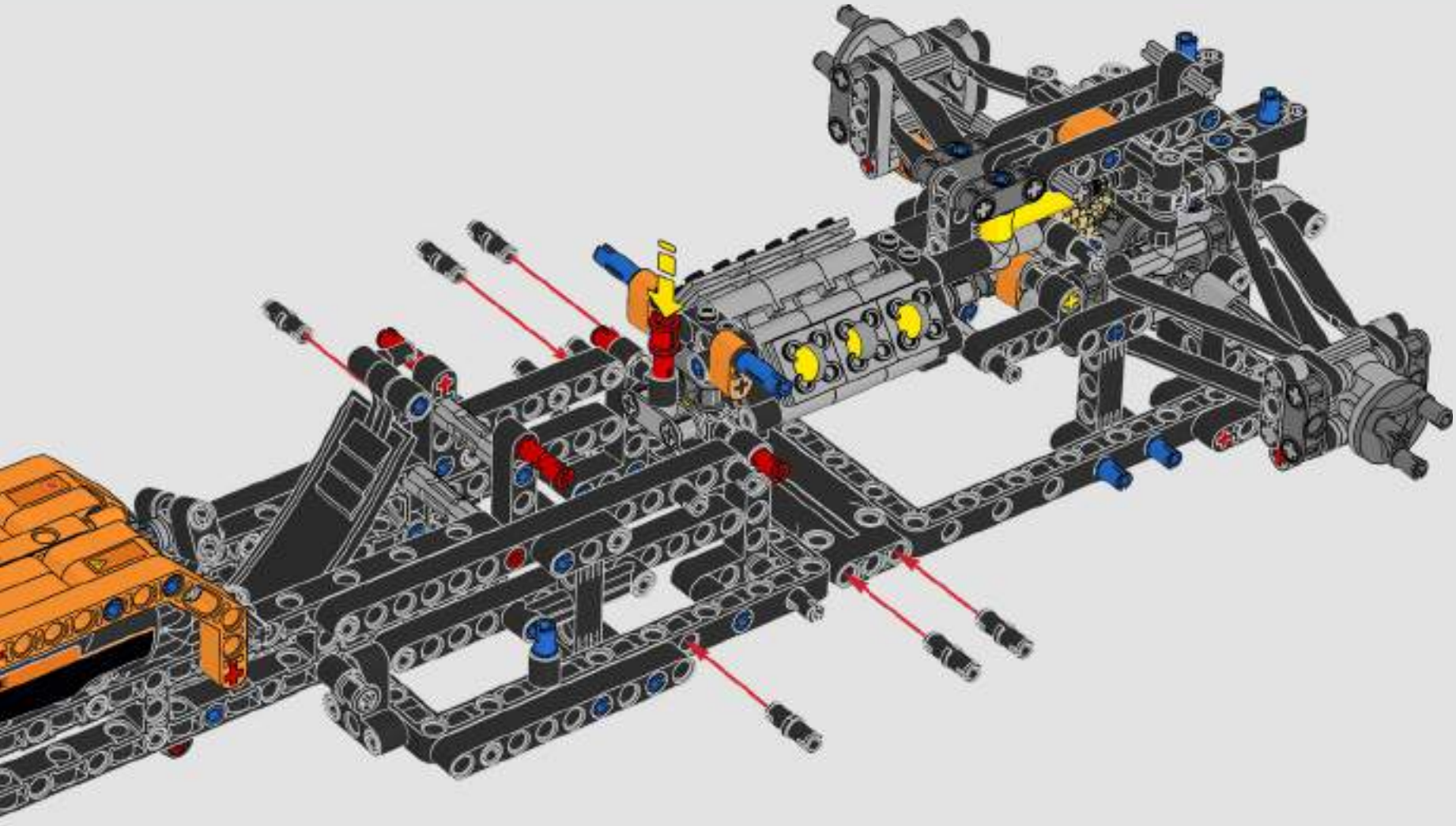

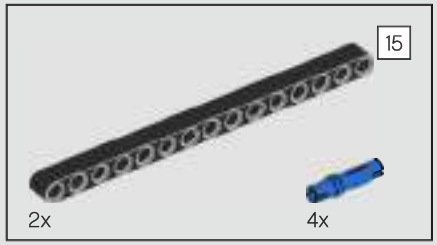

168

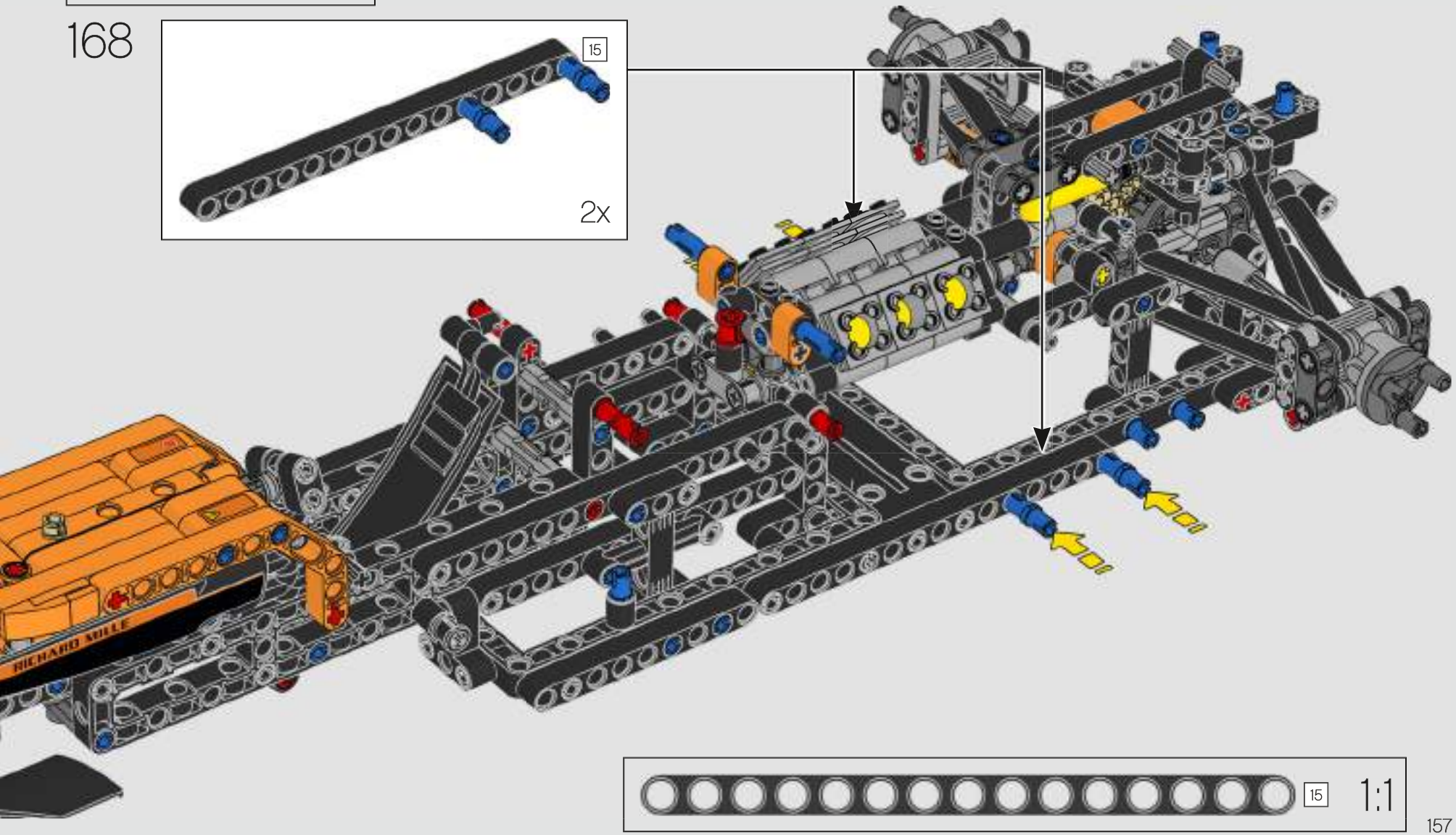

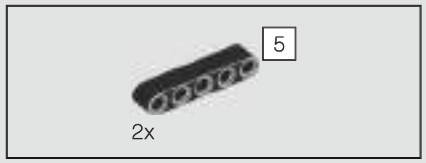

169

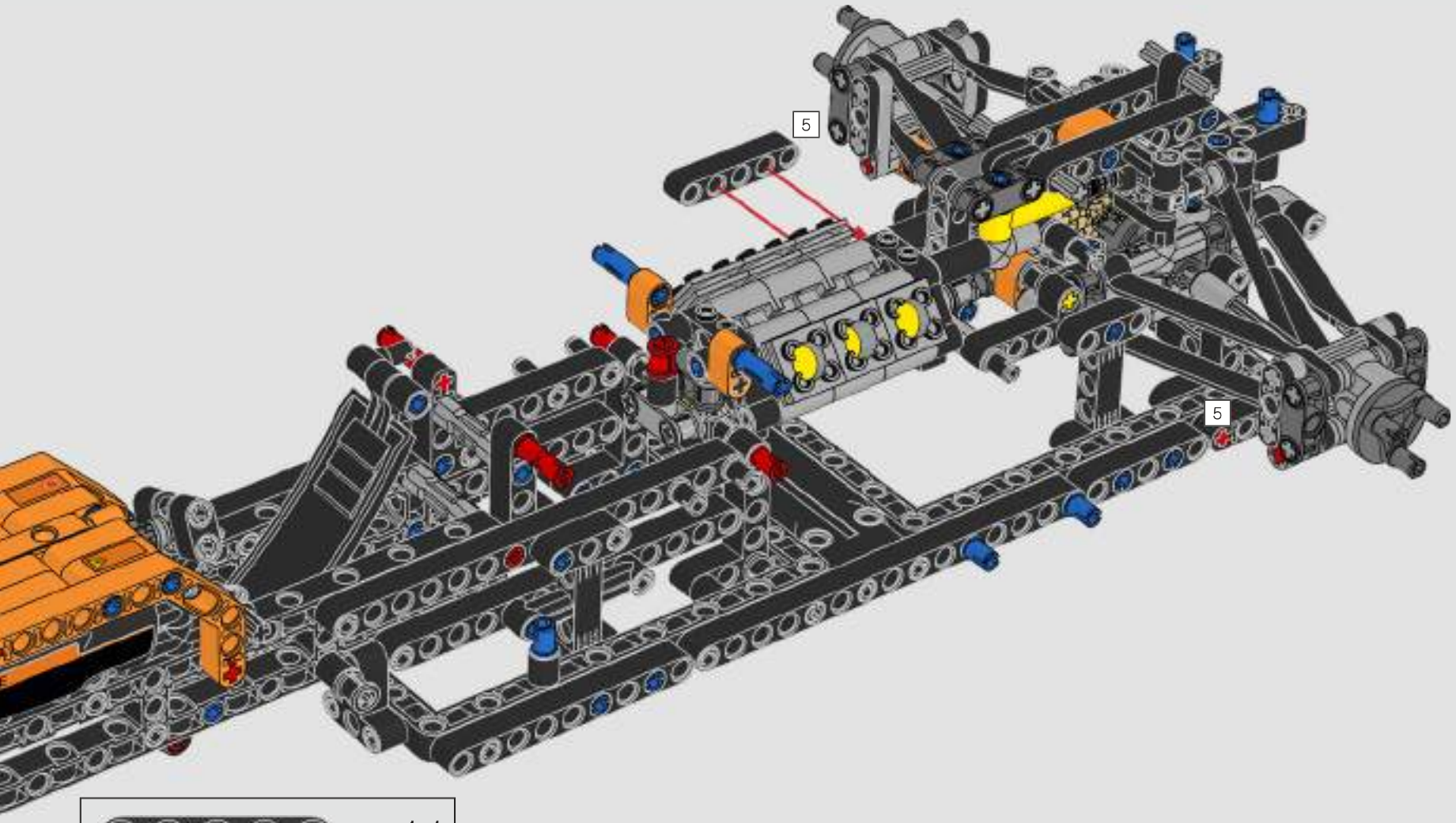

170

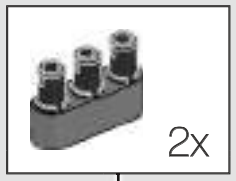

171

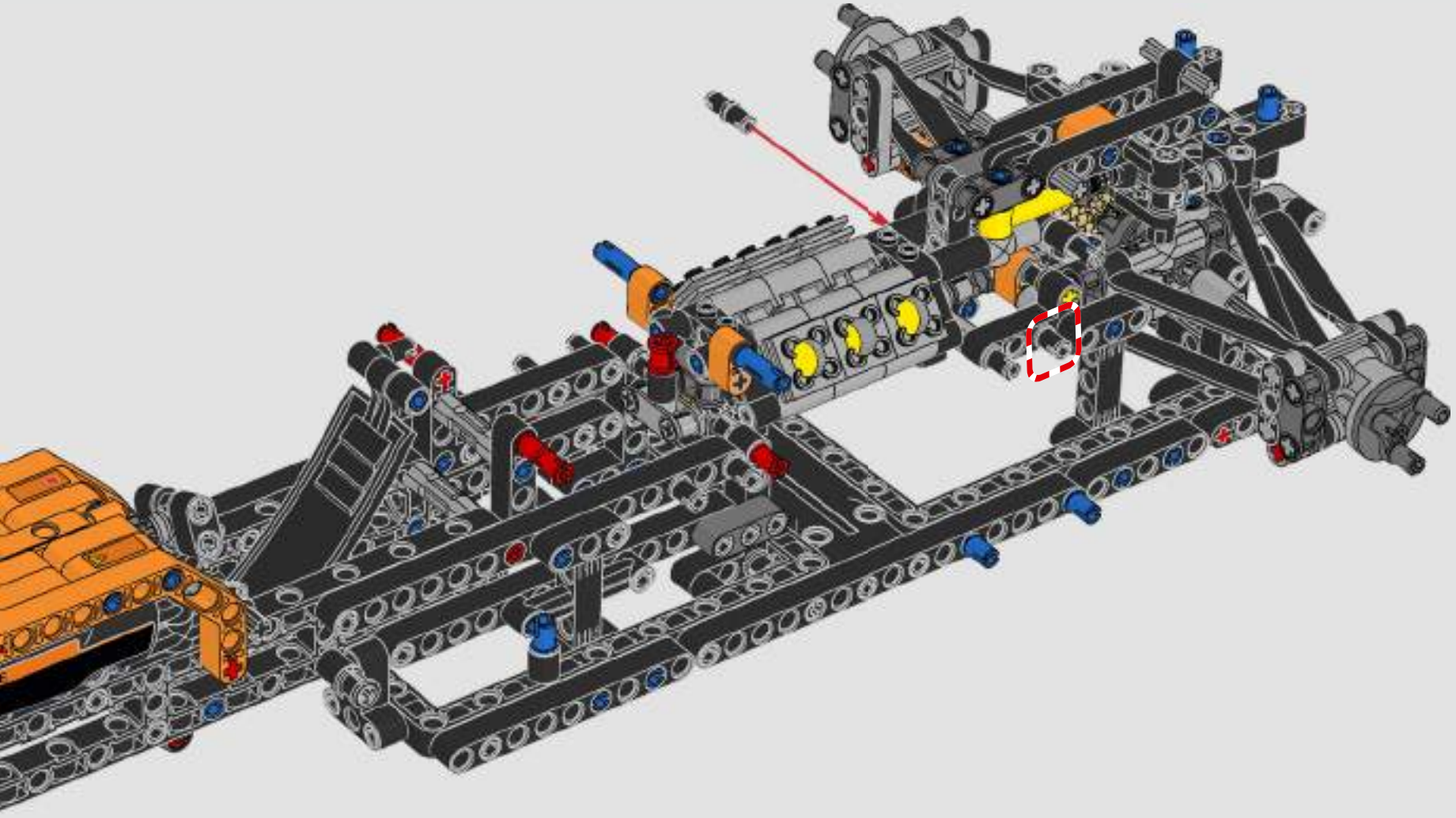

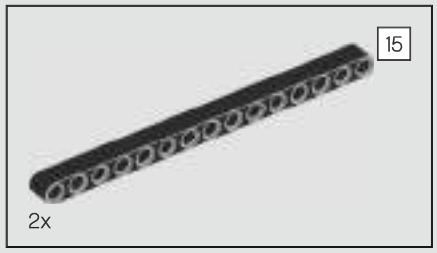

172

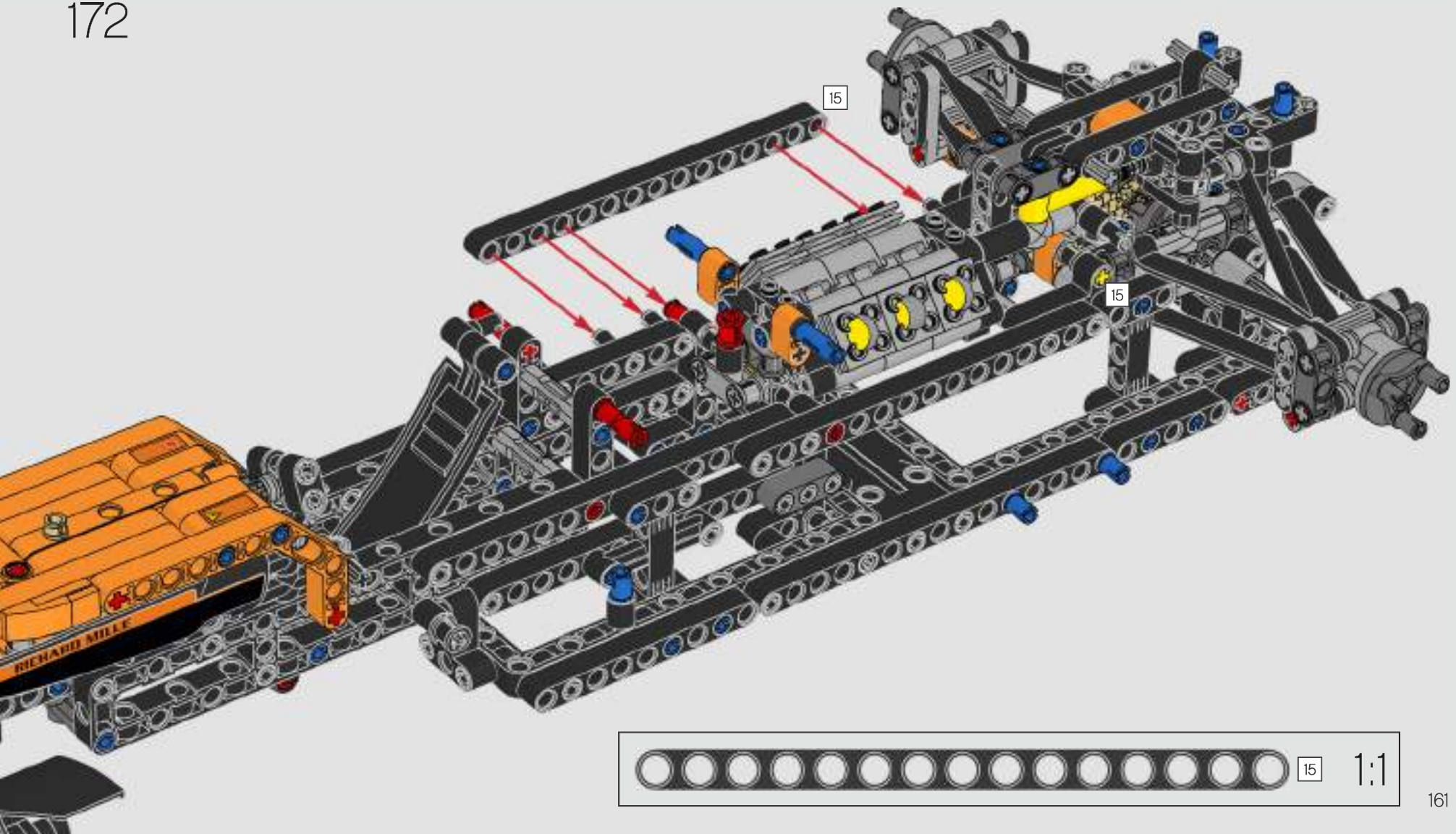

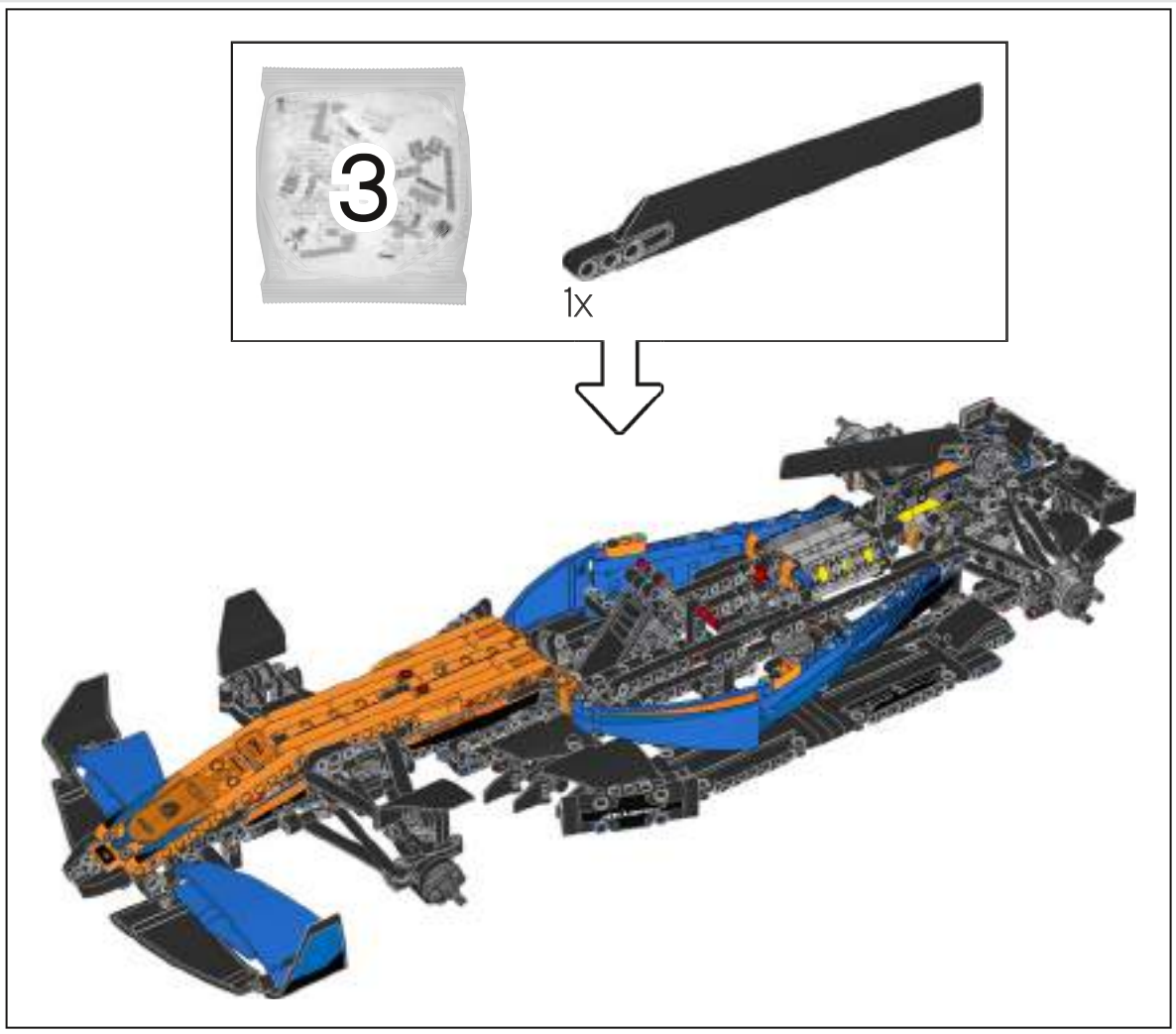
3
1x

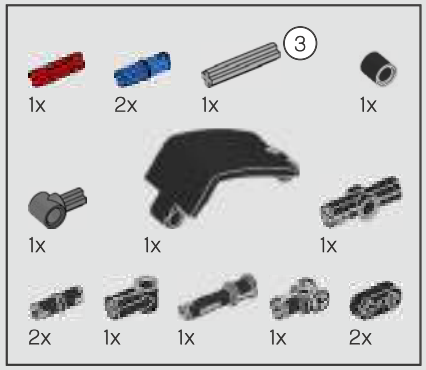

173

1

2

3

4

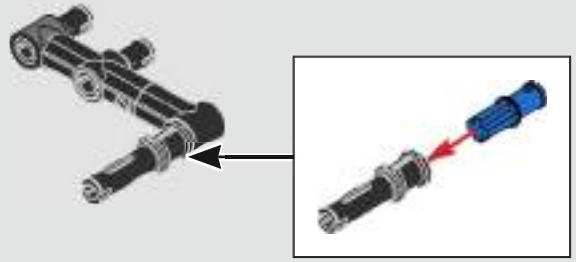

5

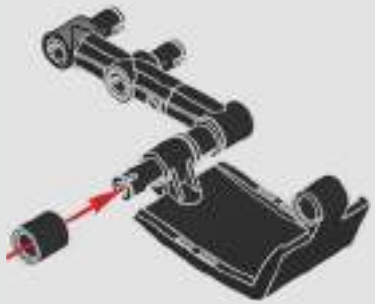

6

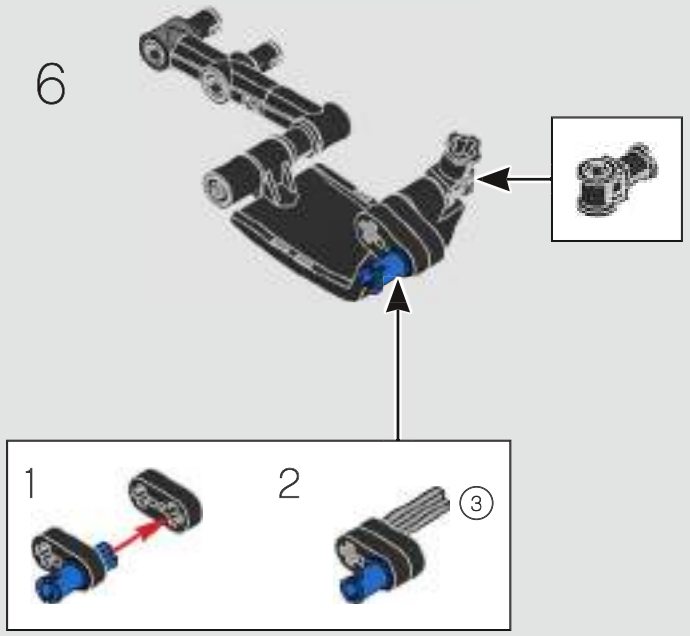

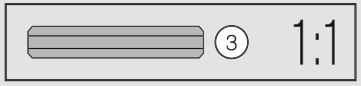

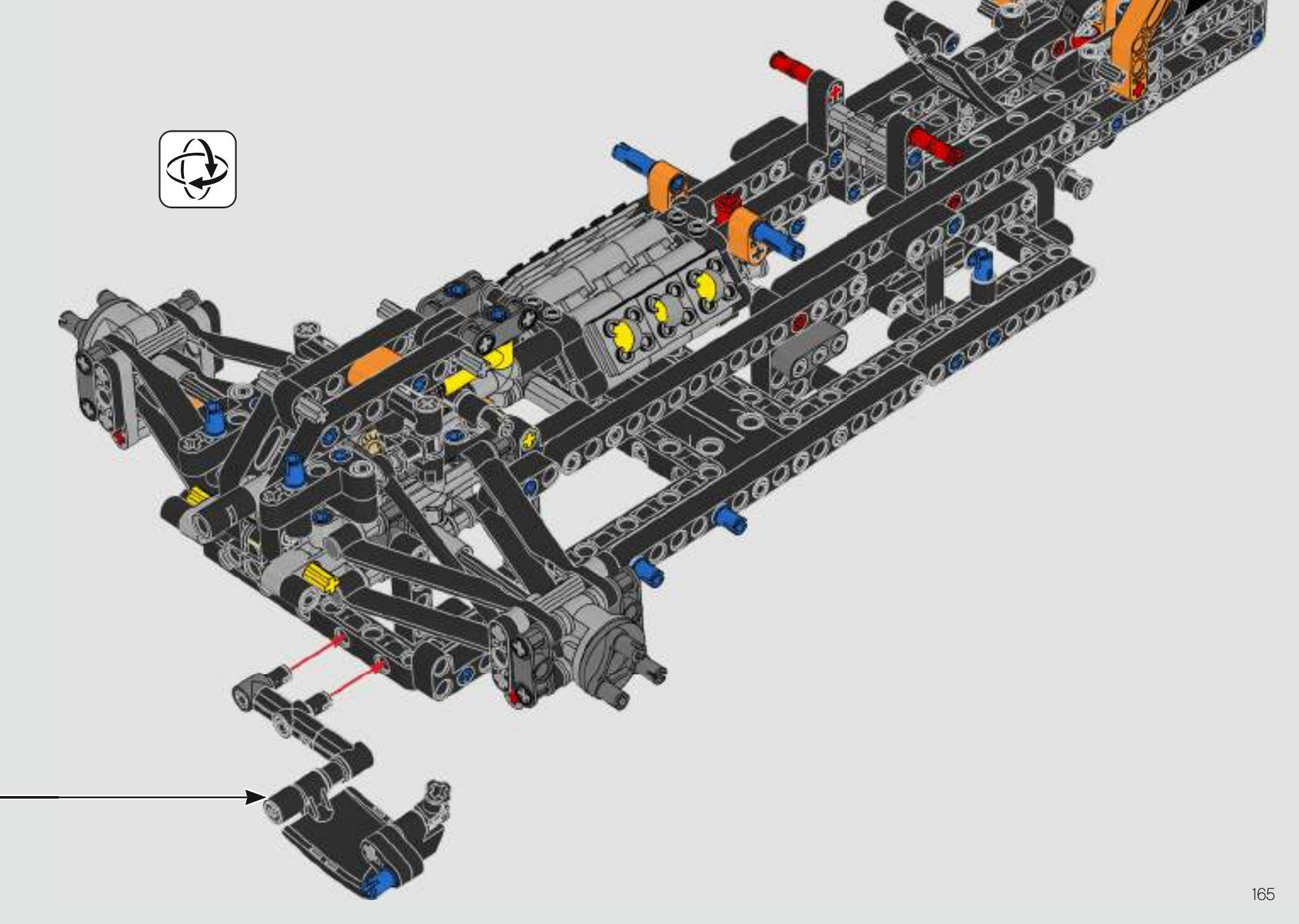

174

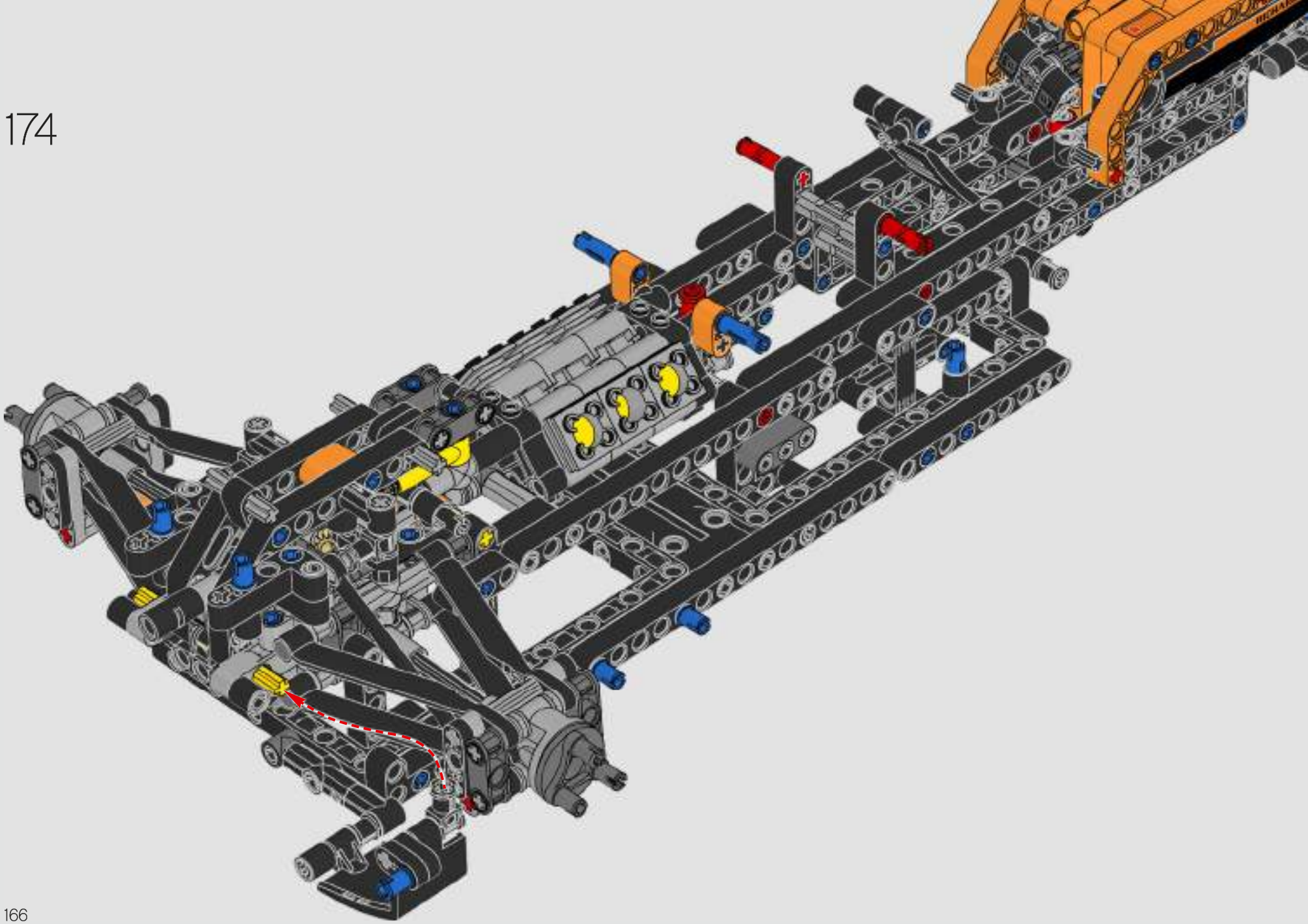

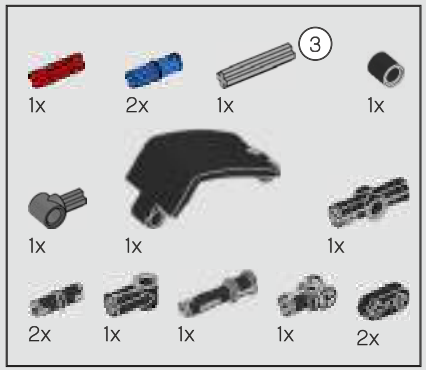

175

1

2

3

4

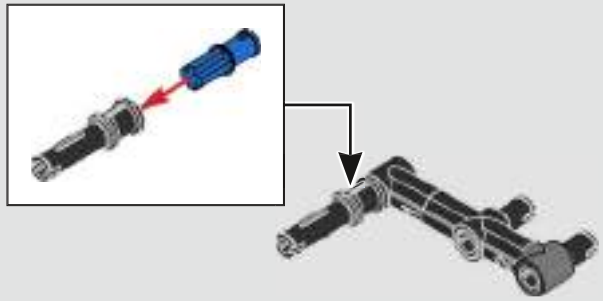

5

6

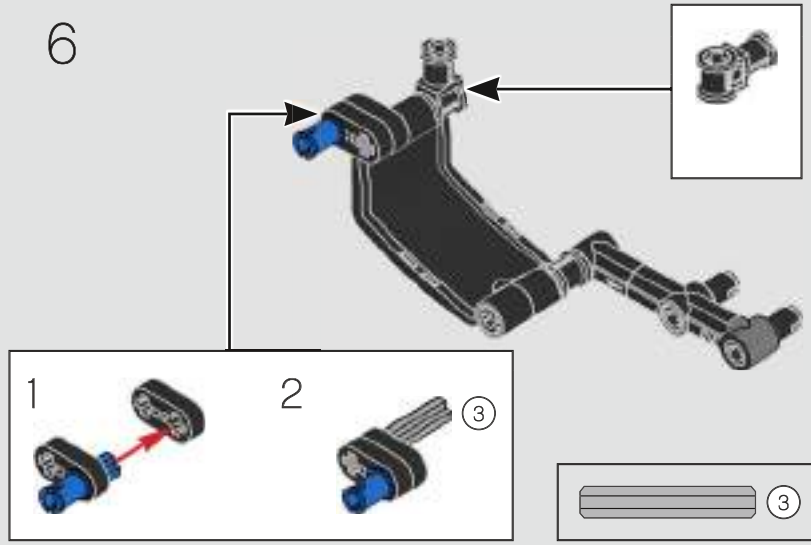

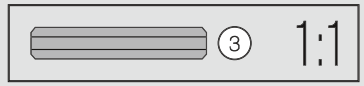

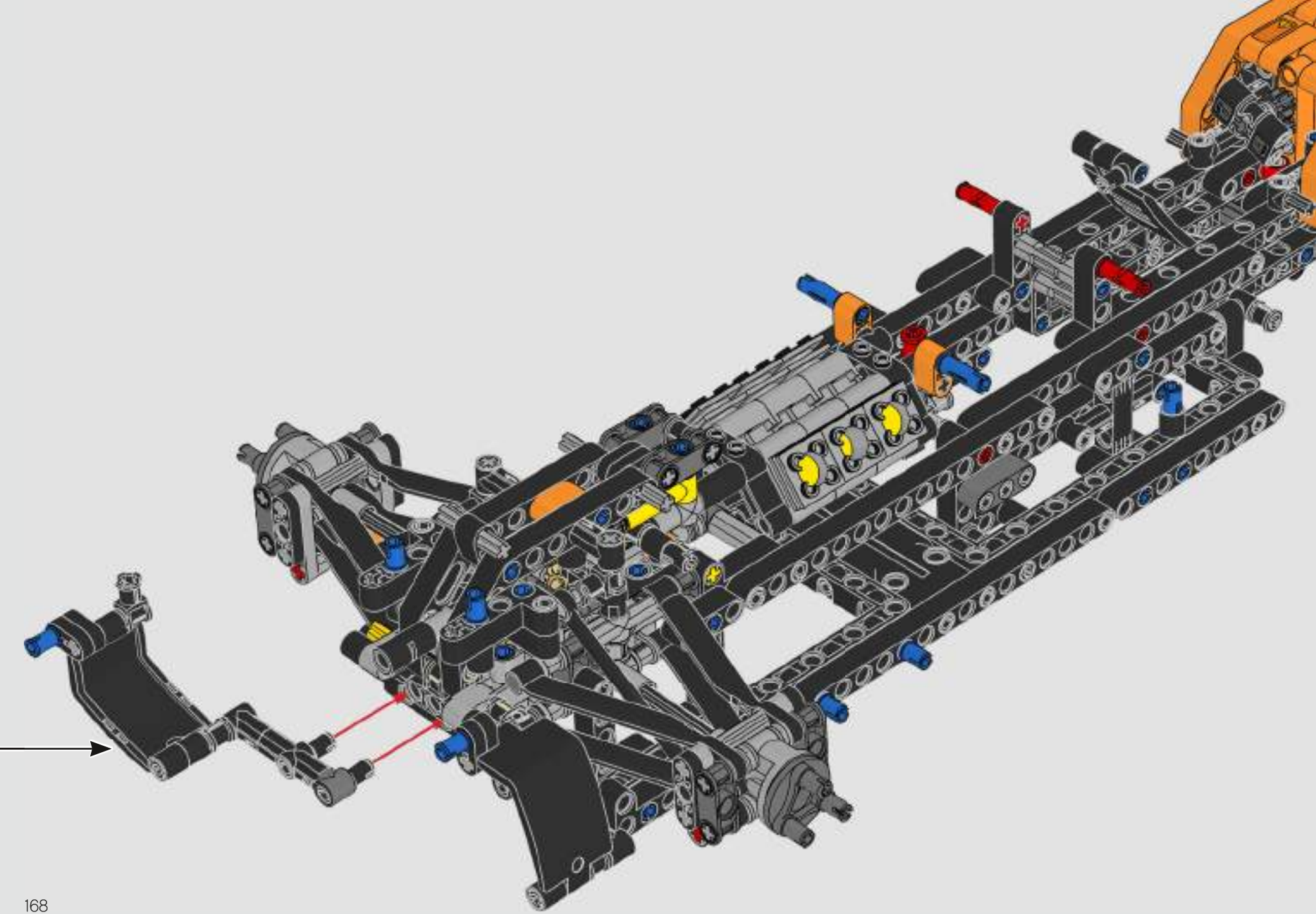

176

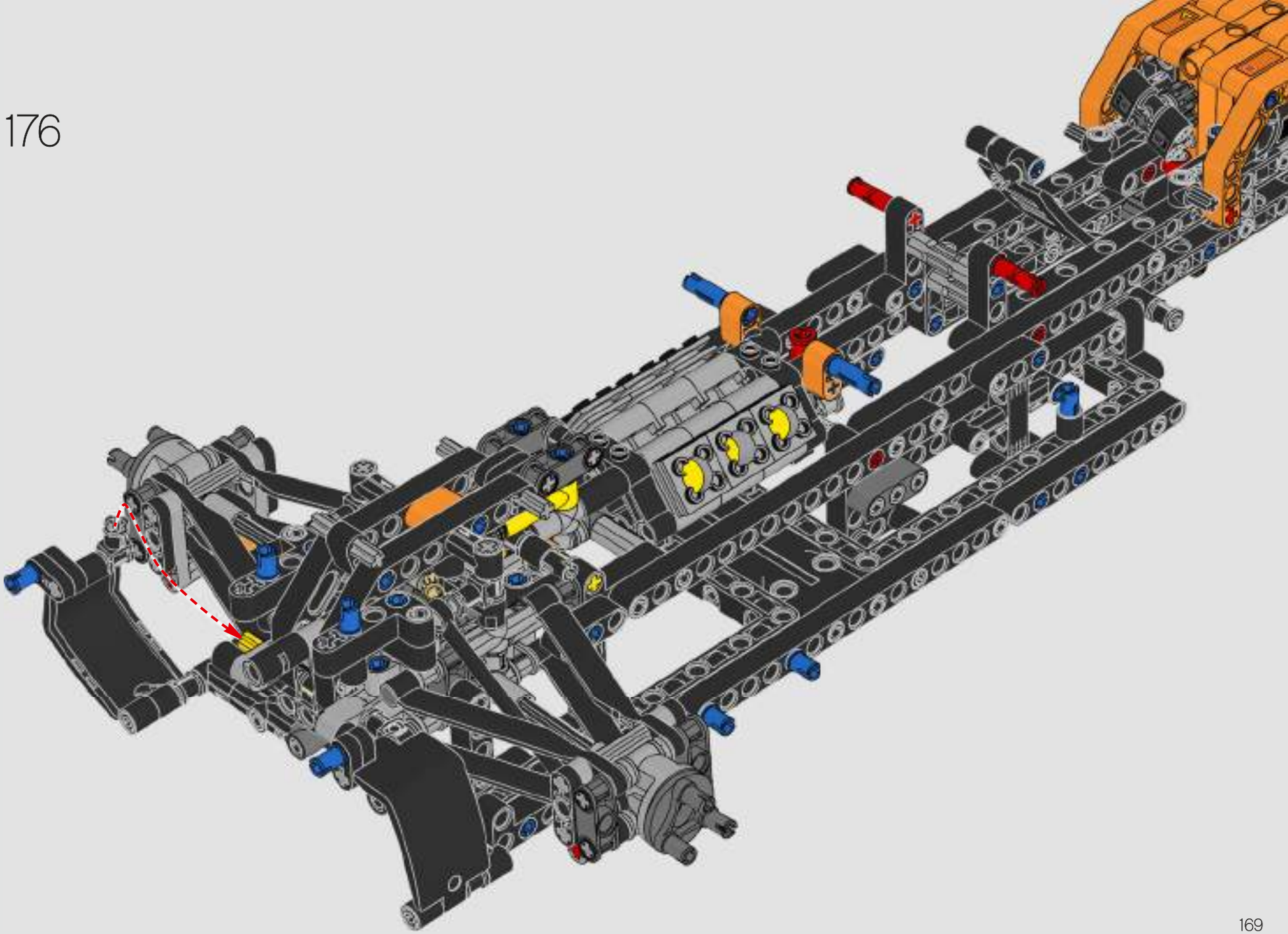

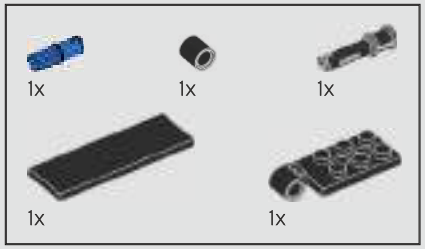

177

1

2

3

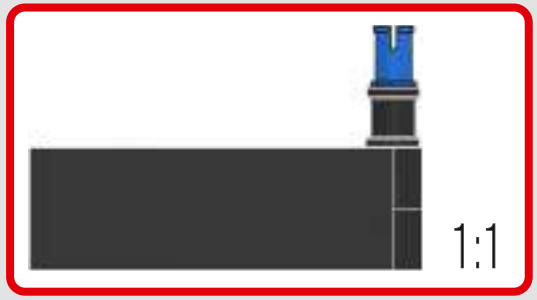

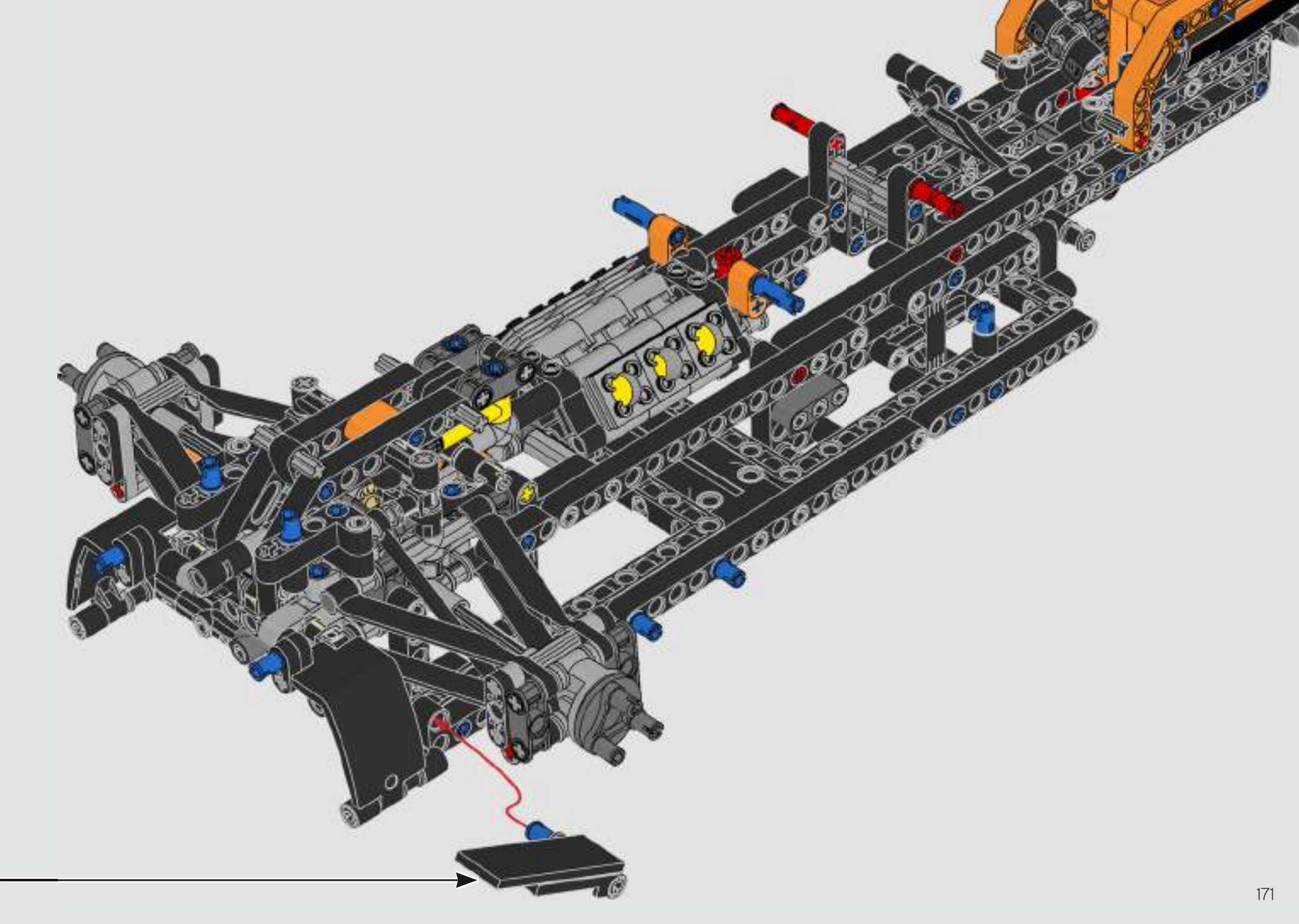

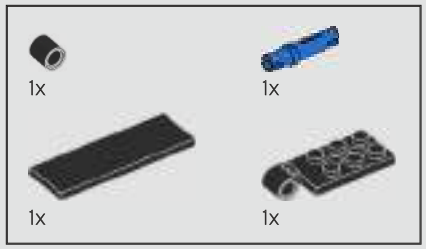

178

1

2

3

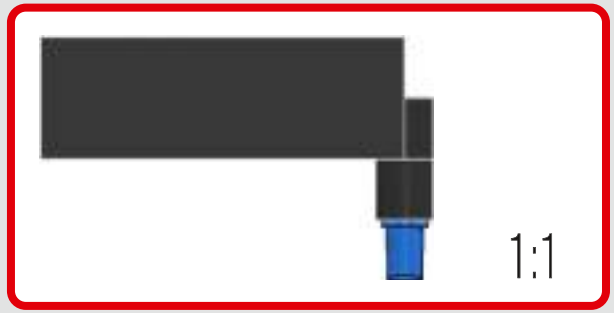

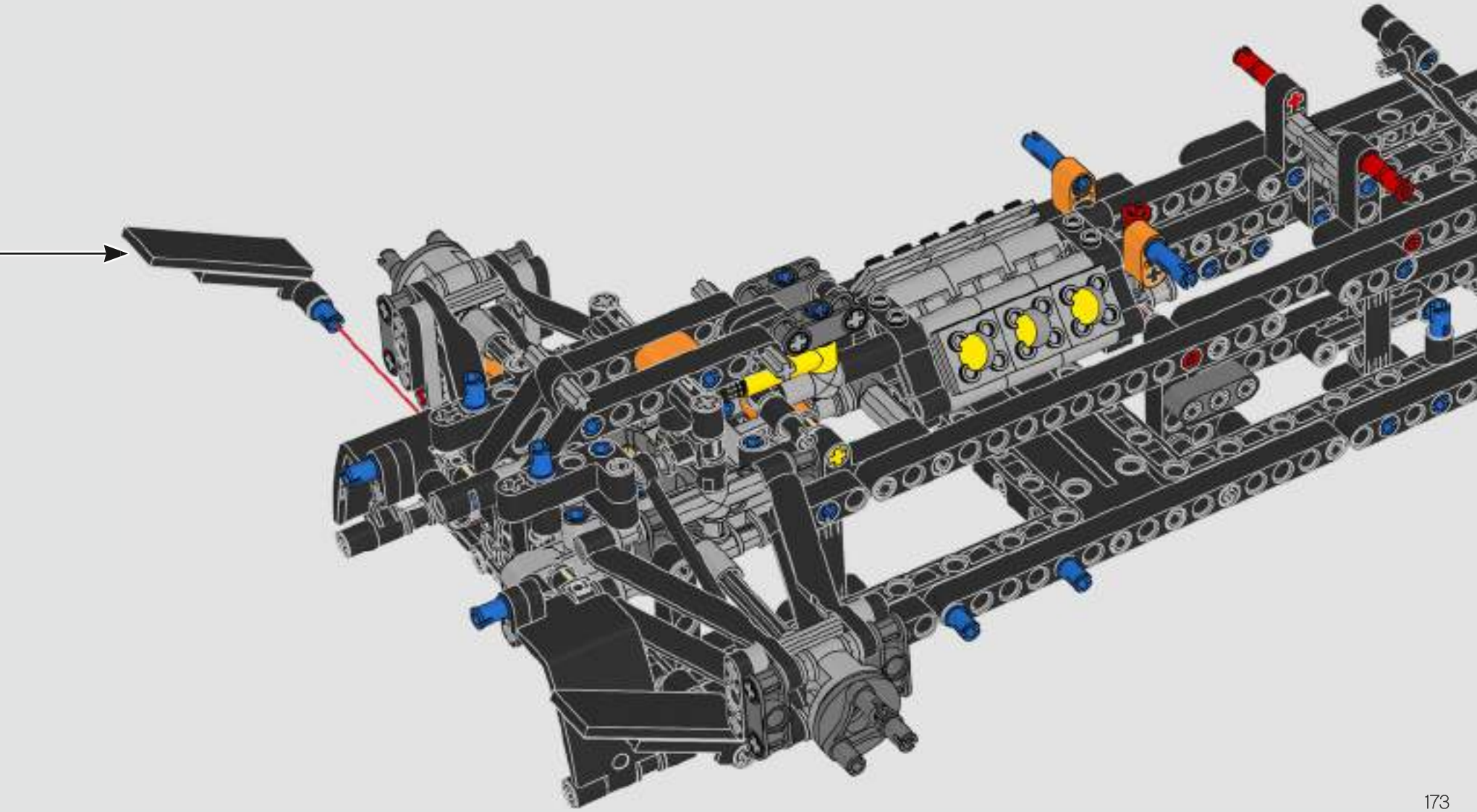

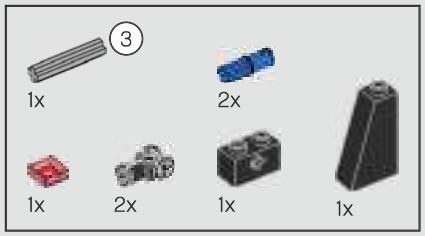

179

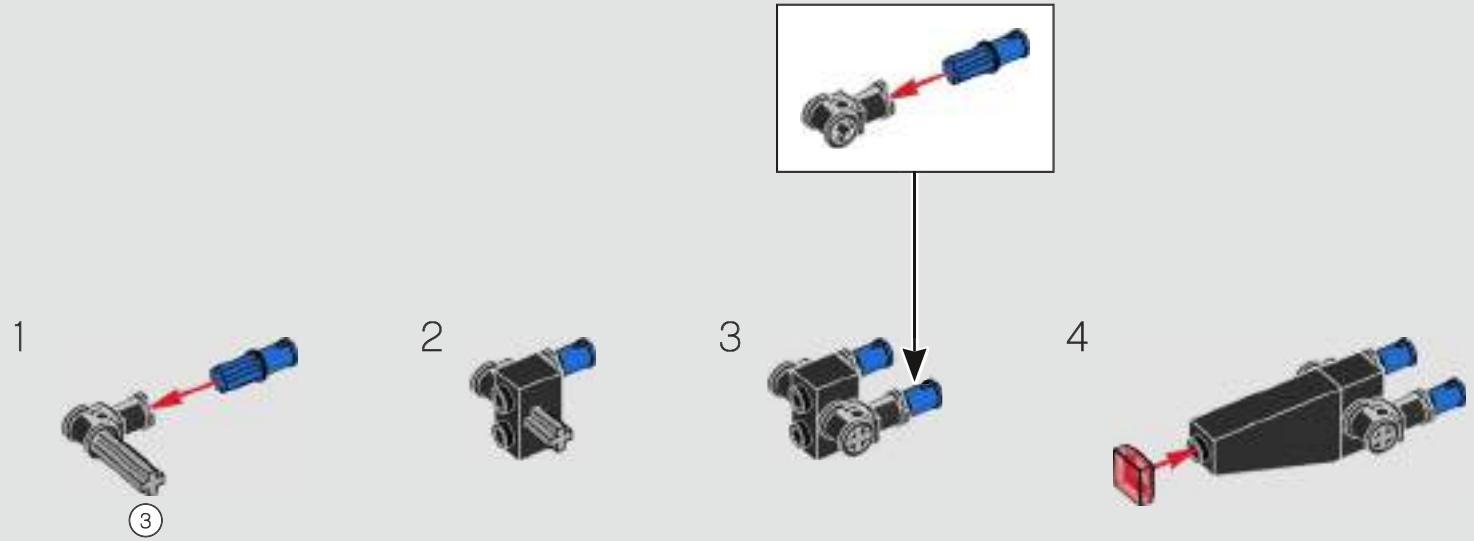

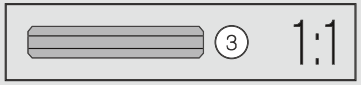

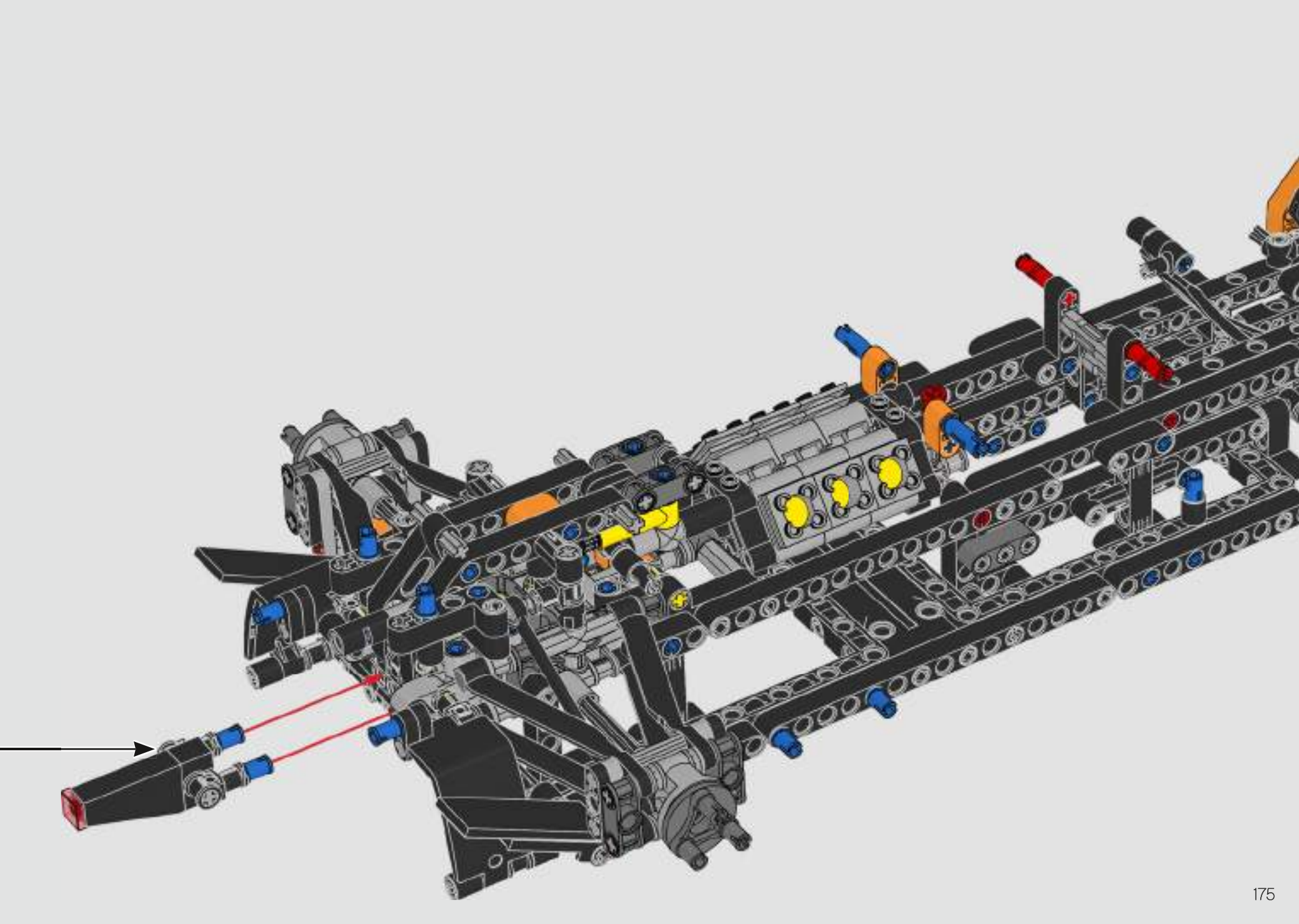

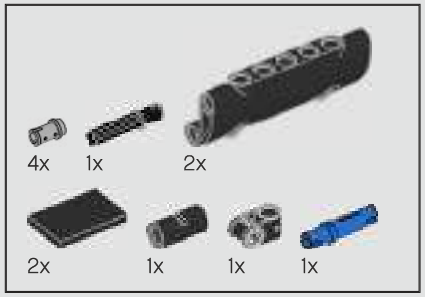

180

1

2

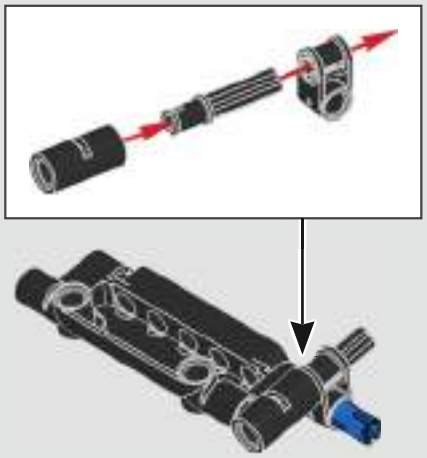

3

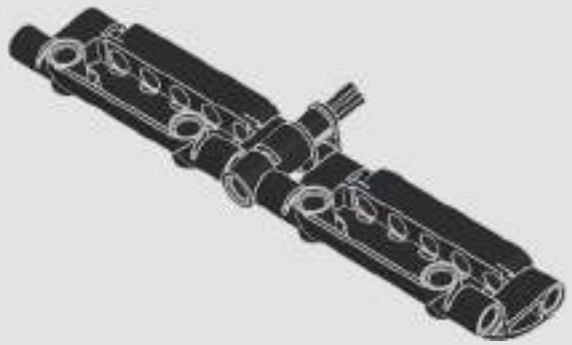

4

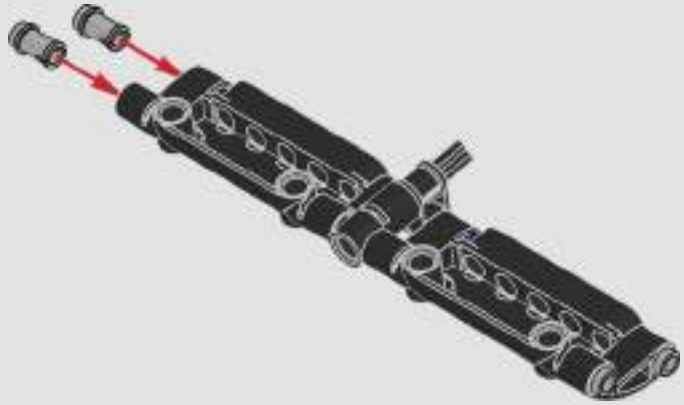

5

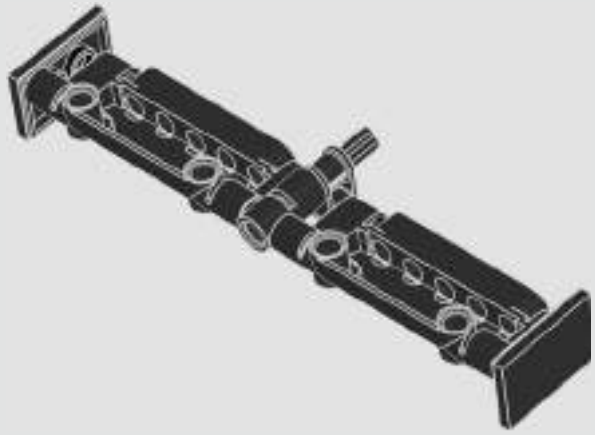

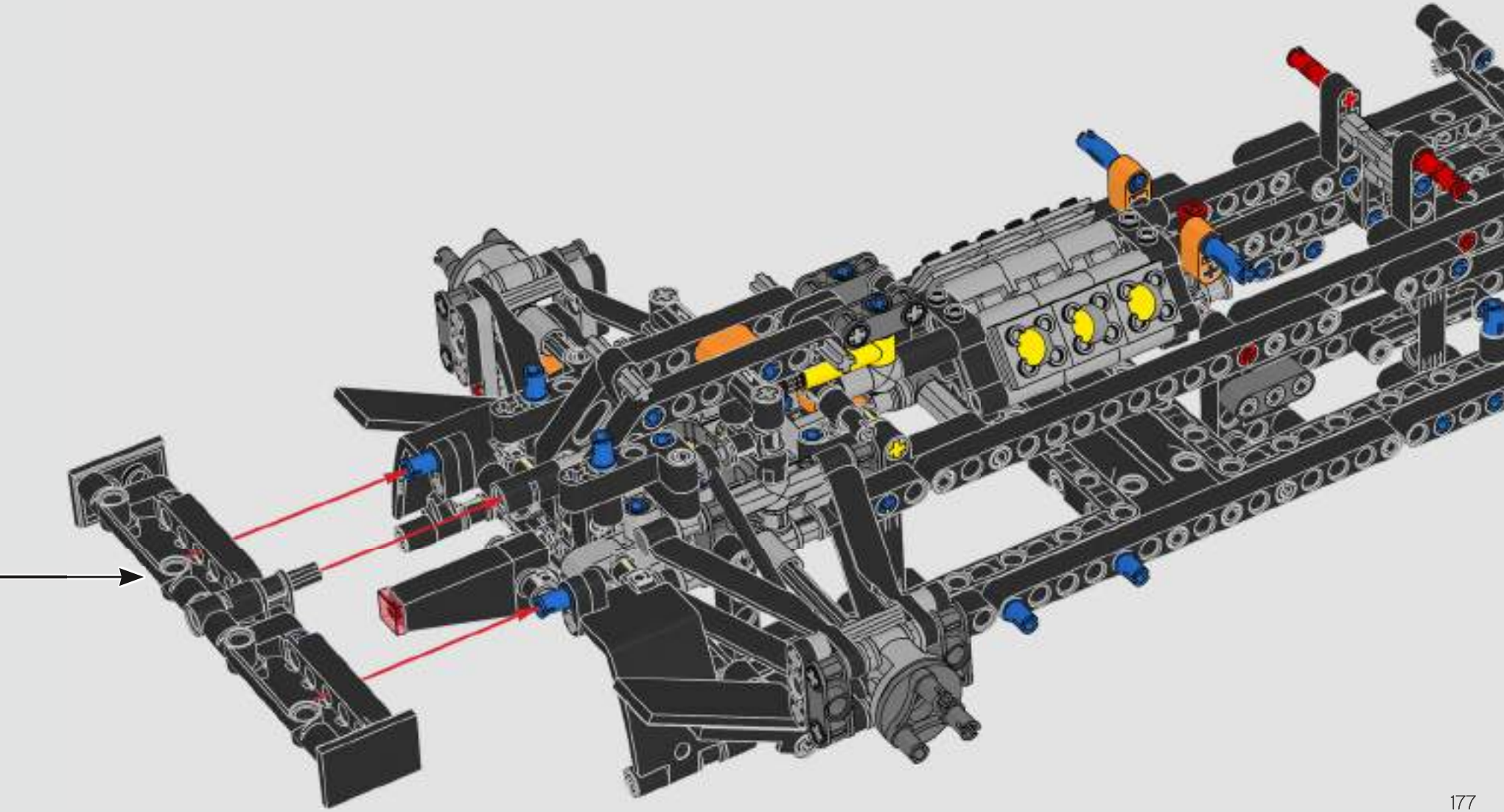

2x

181

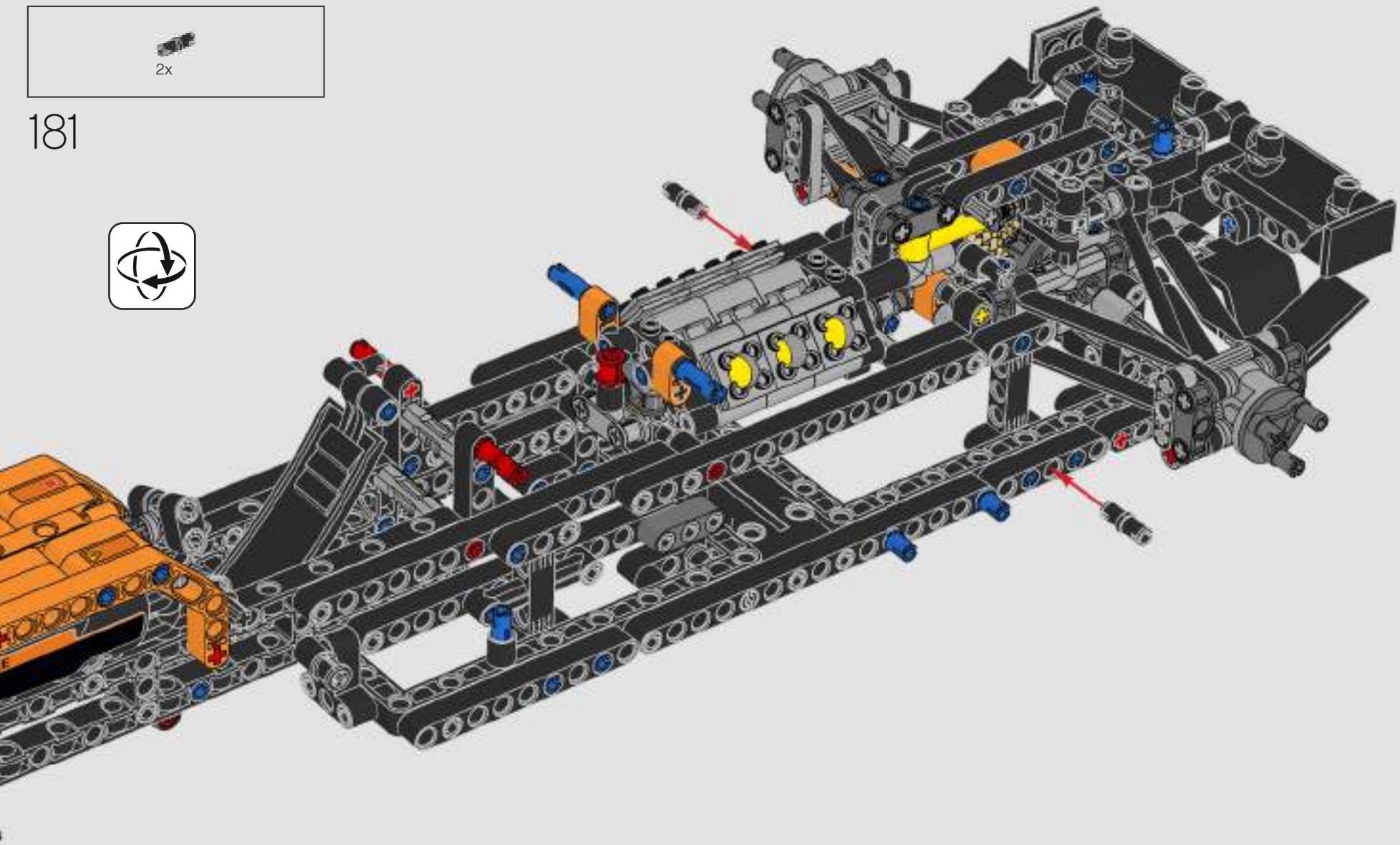

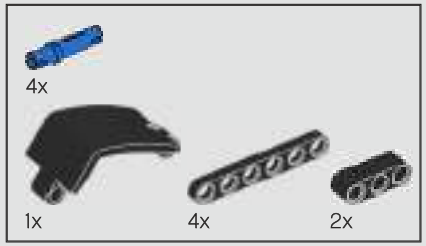

182

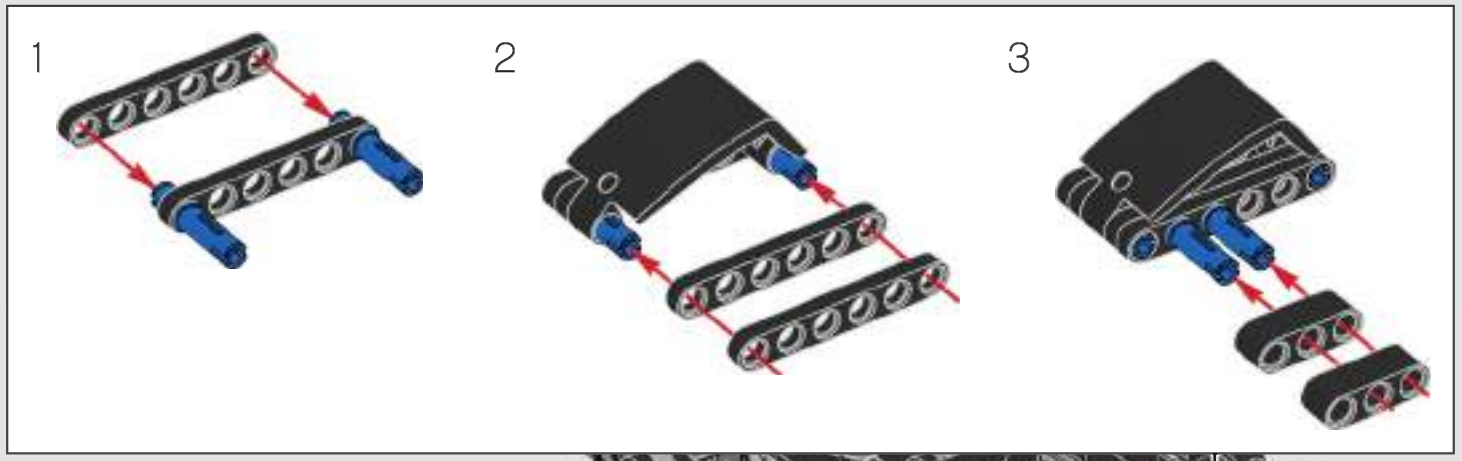

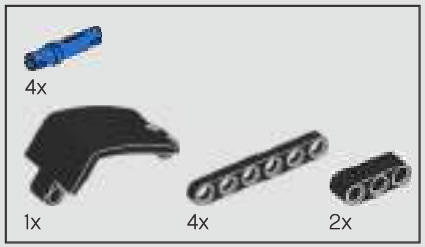

183

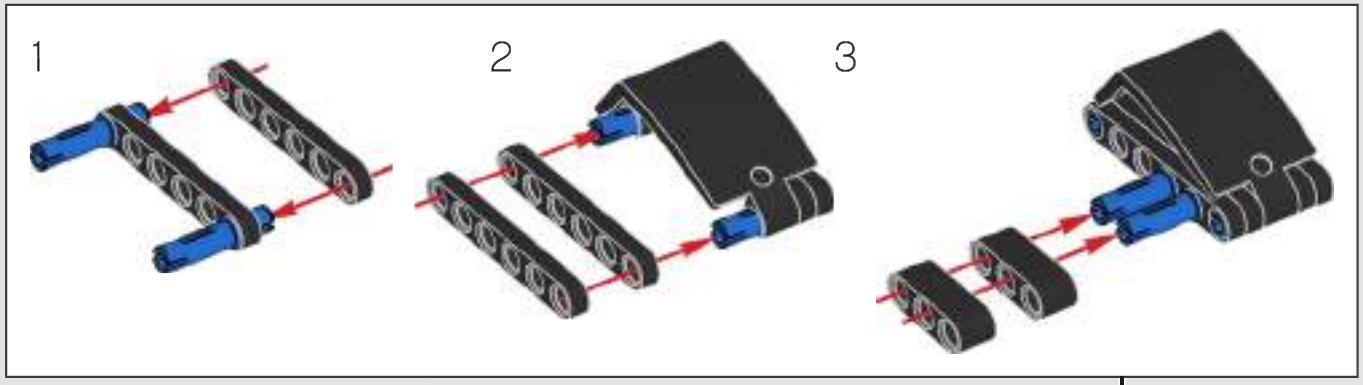

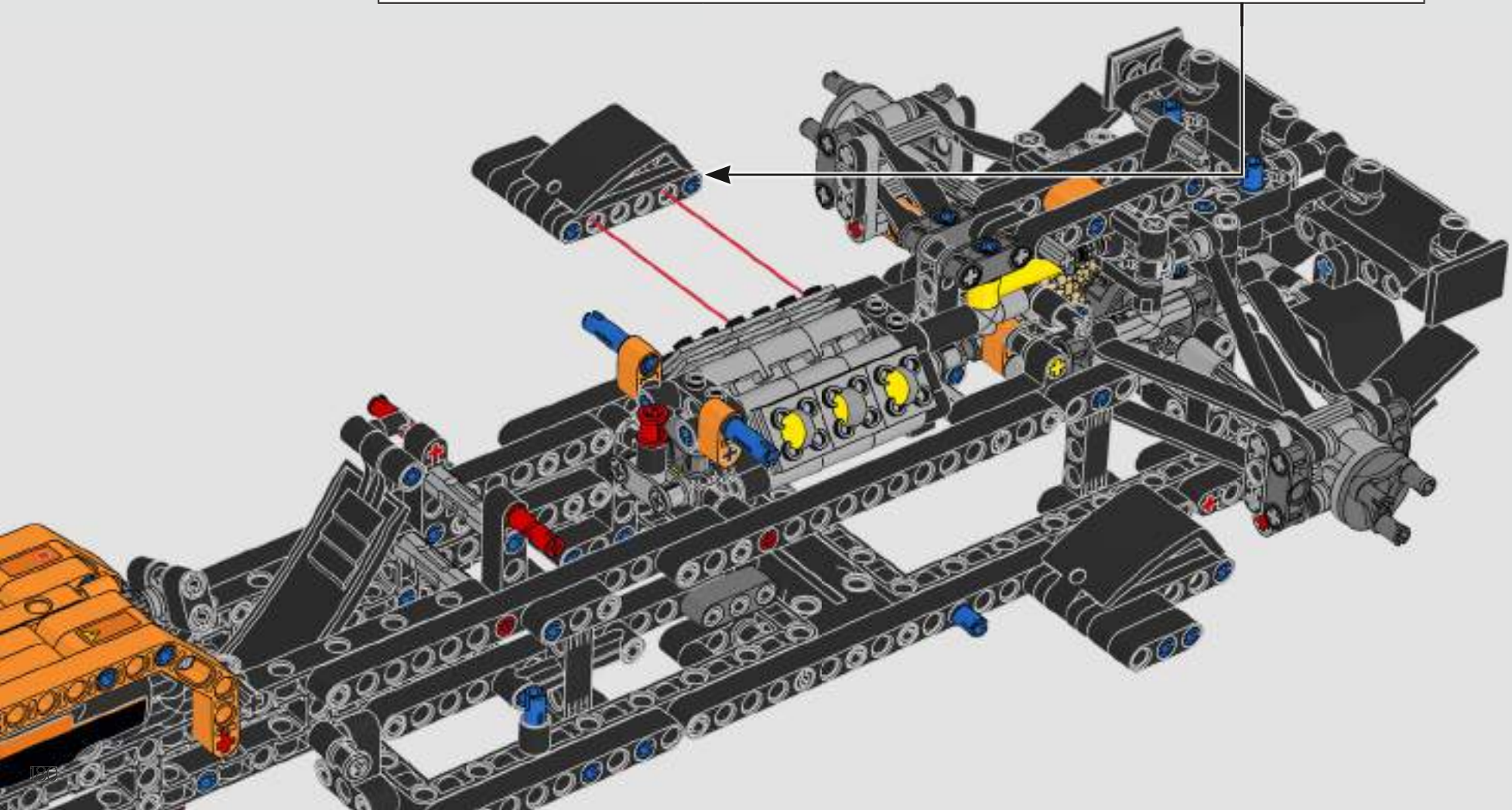

6x

184

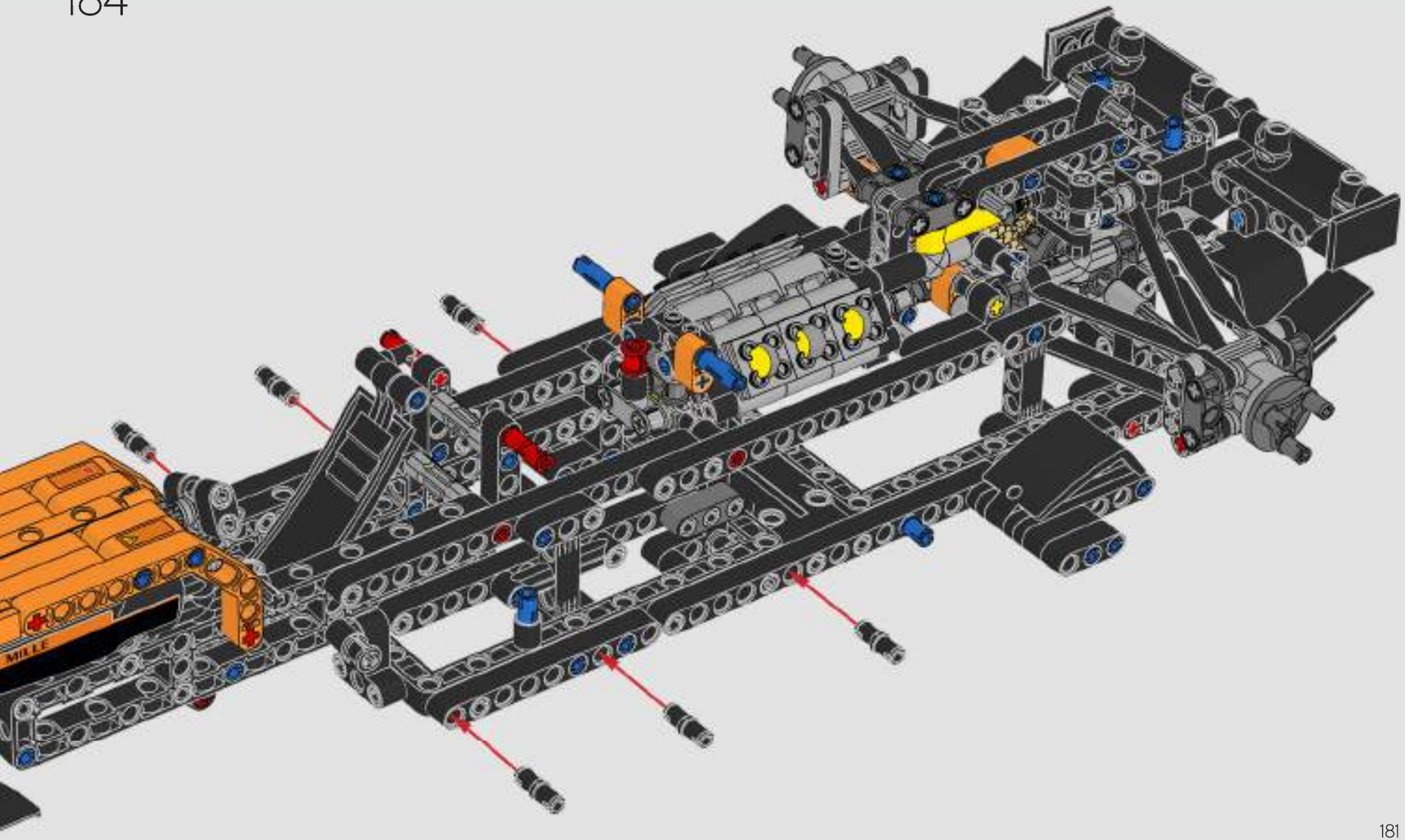

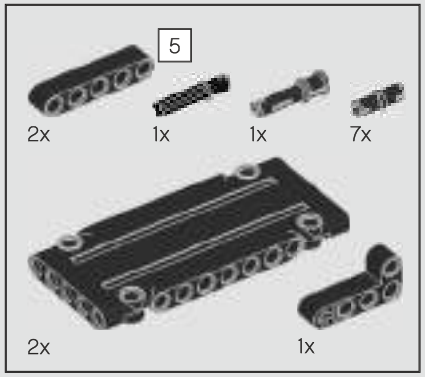

185

1

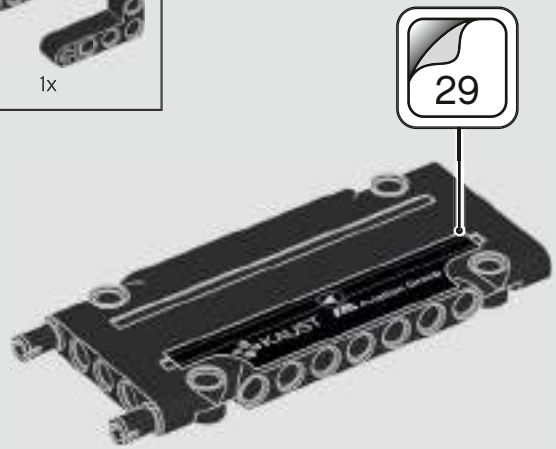

2

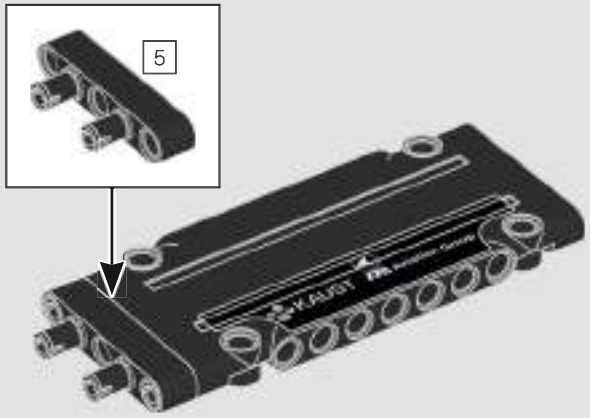

3

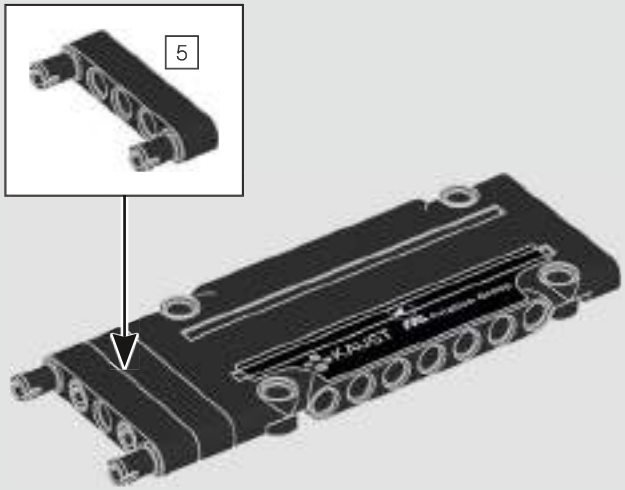

4

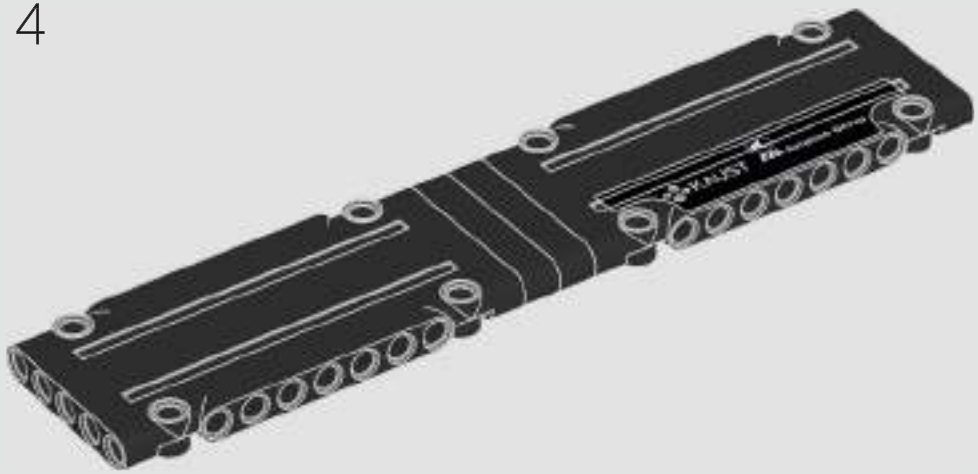

5

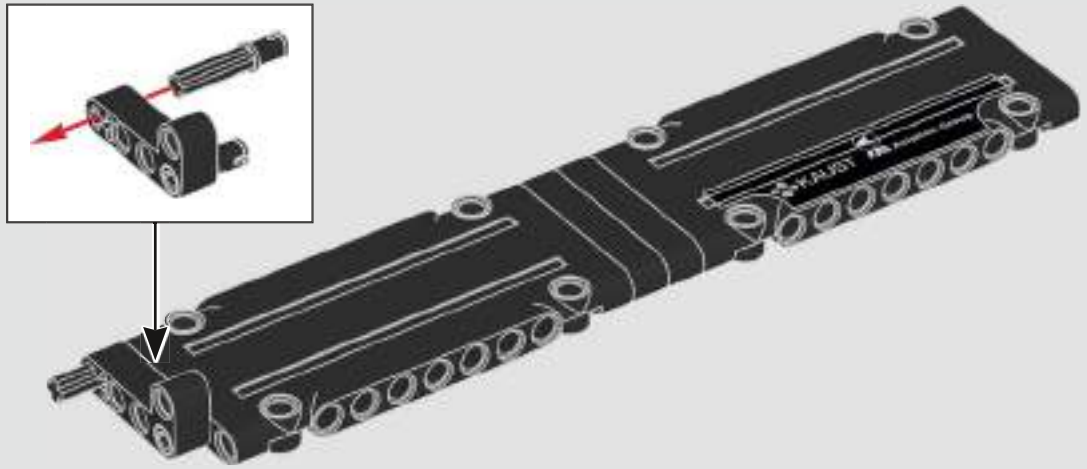

6

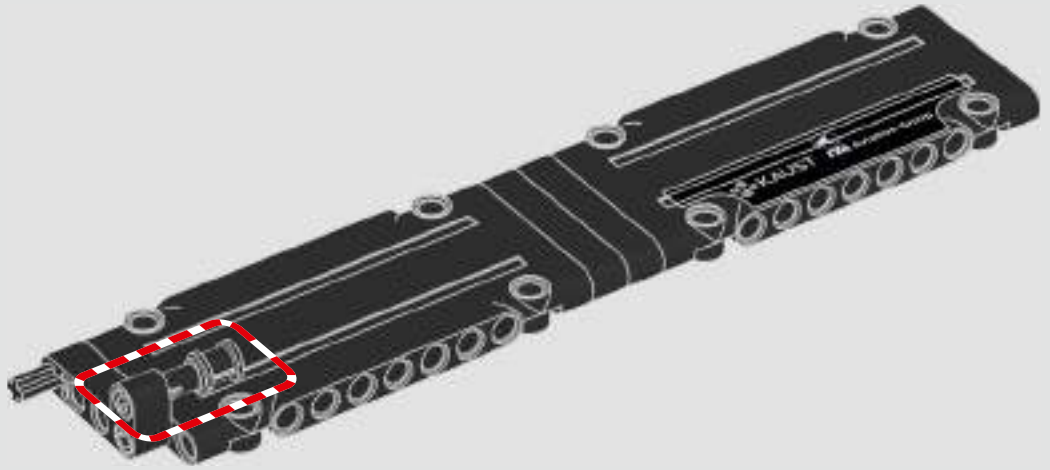

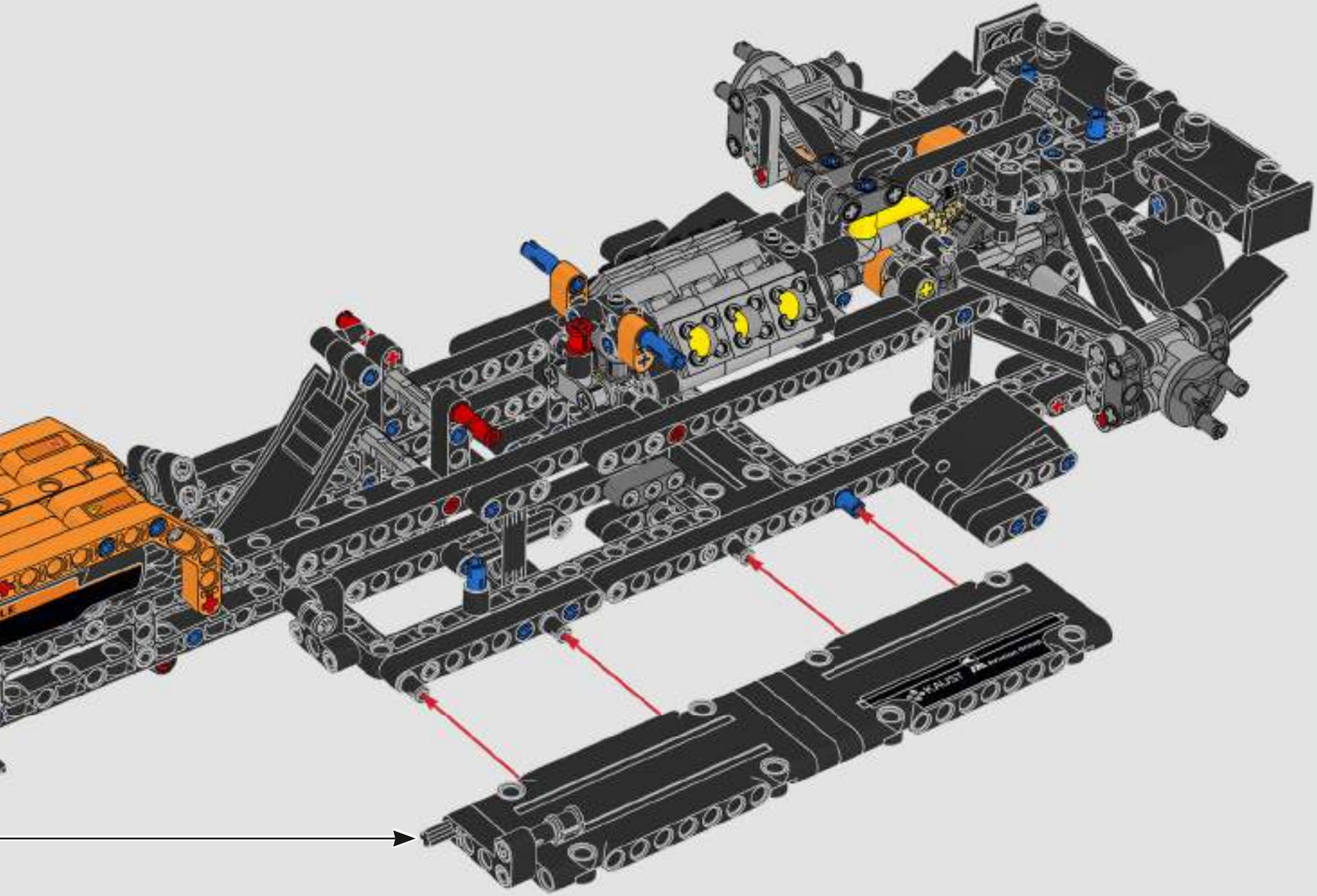

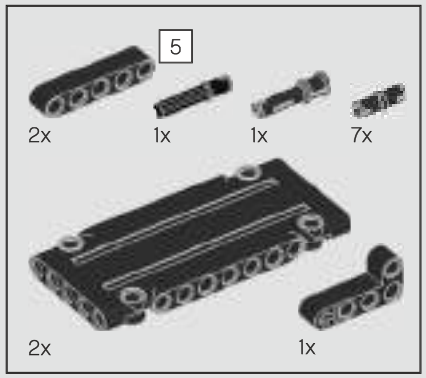

186

1

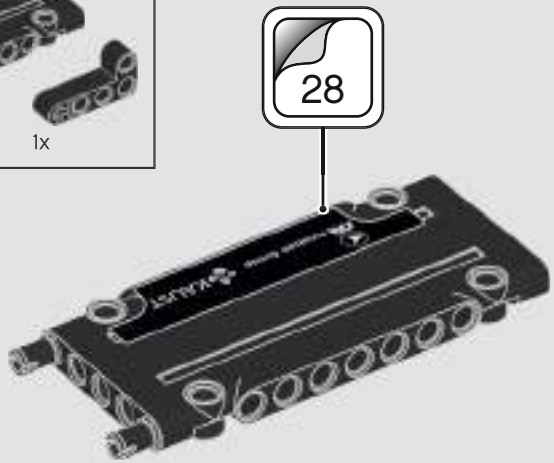

2

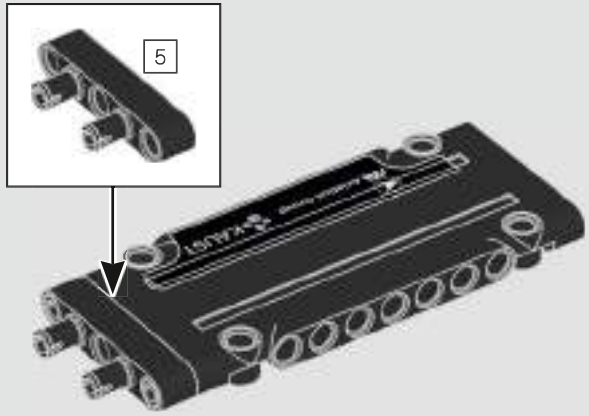

3

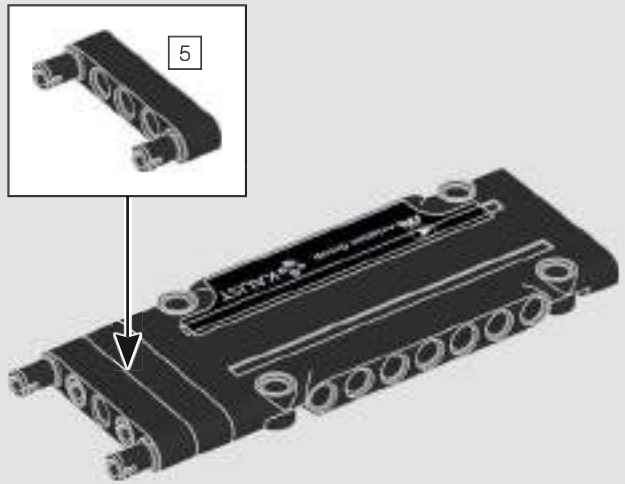

4

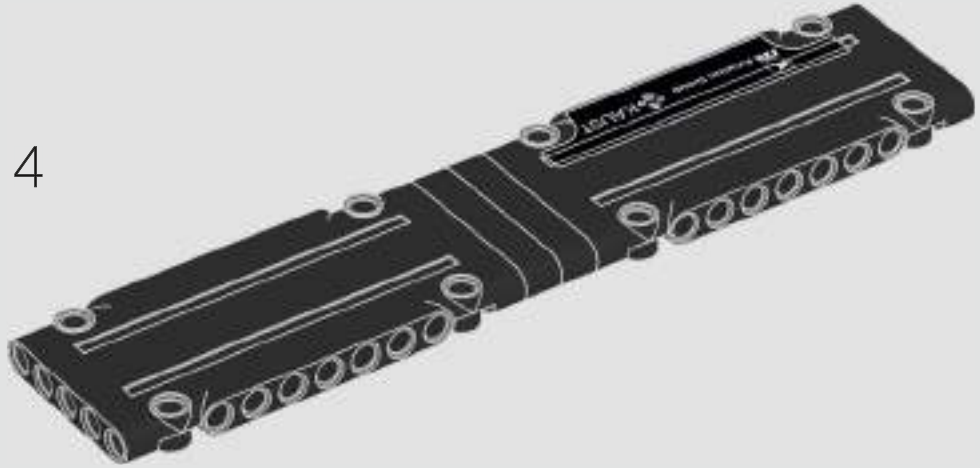

5

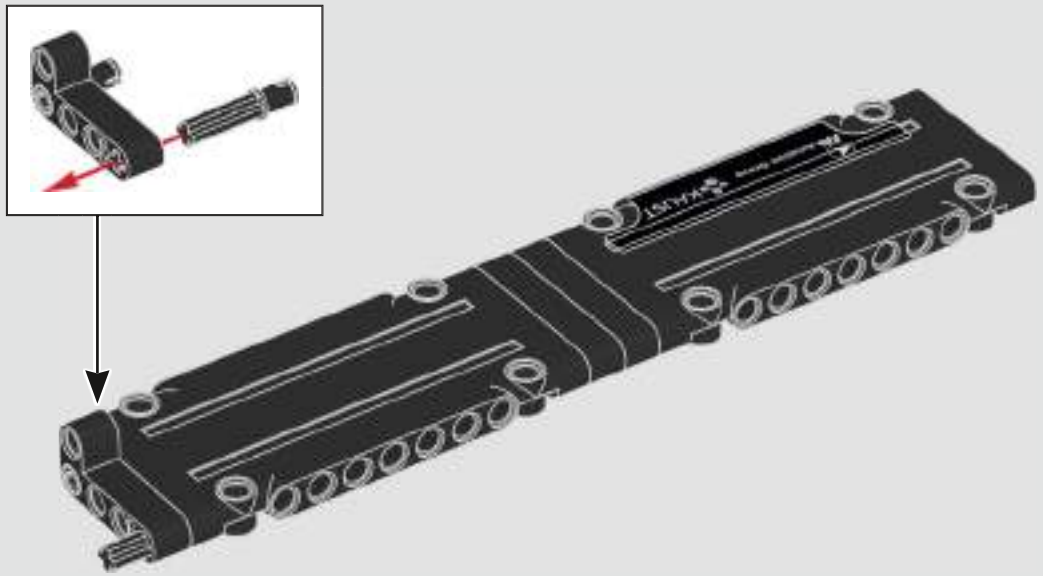

6

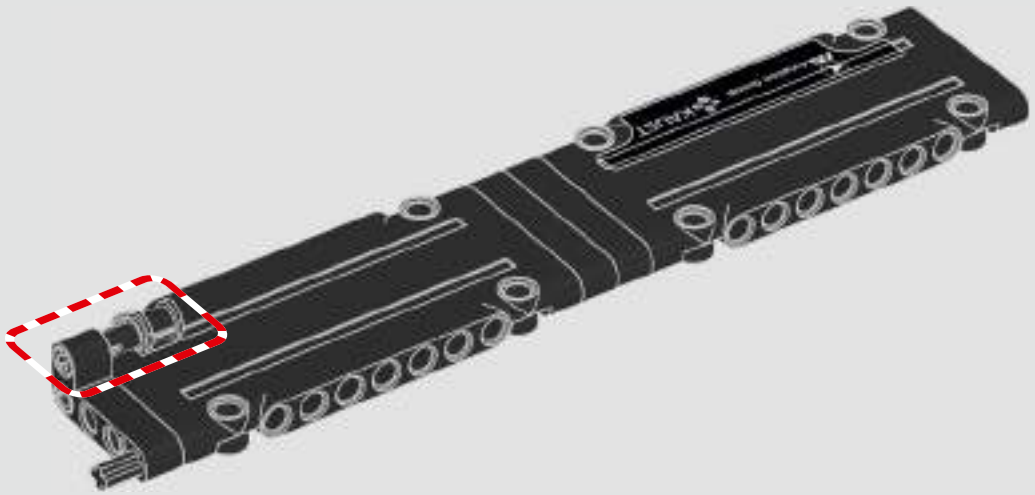

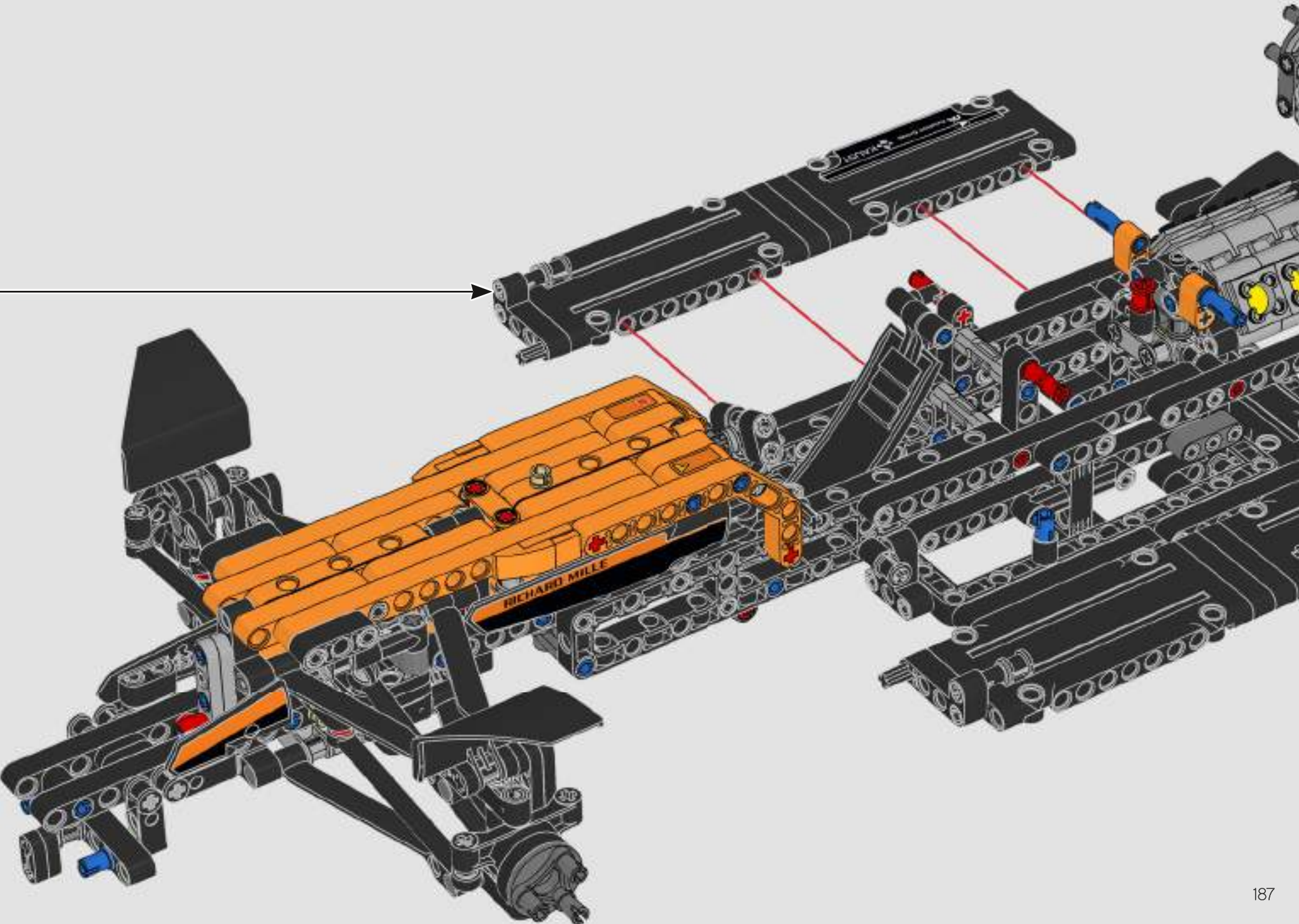
RICHARD MILLE

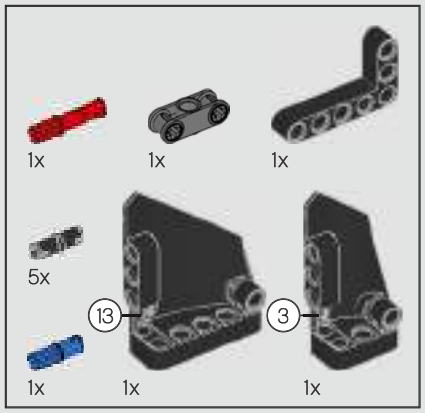

187

1

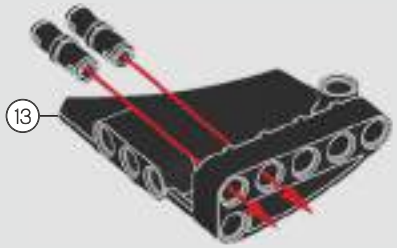

2

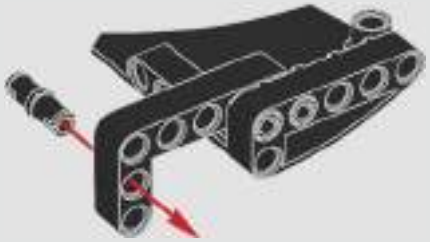

3

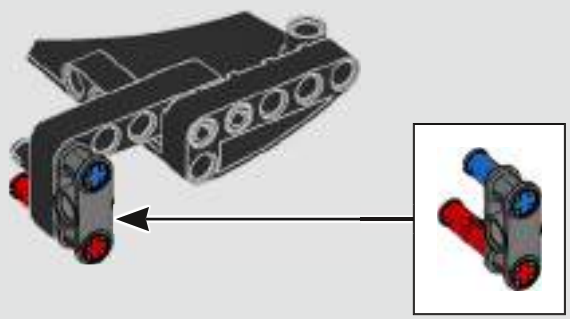

4

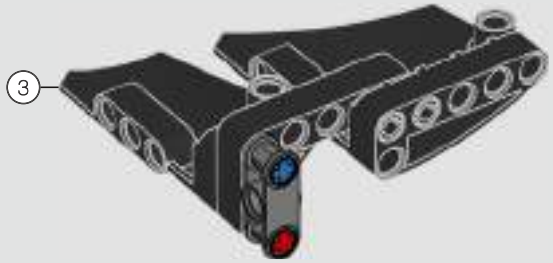

5

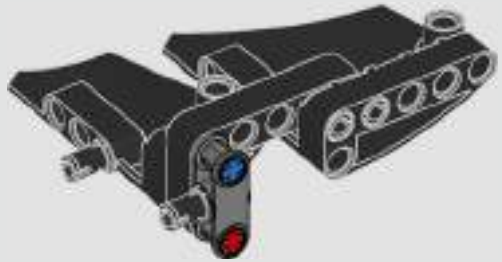

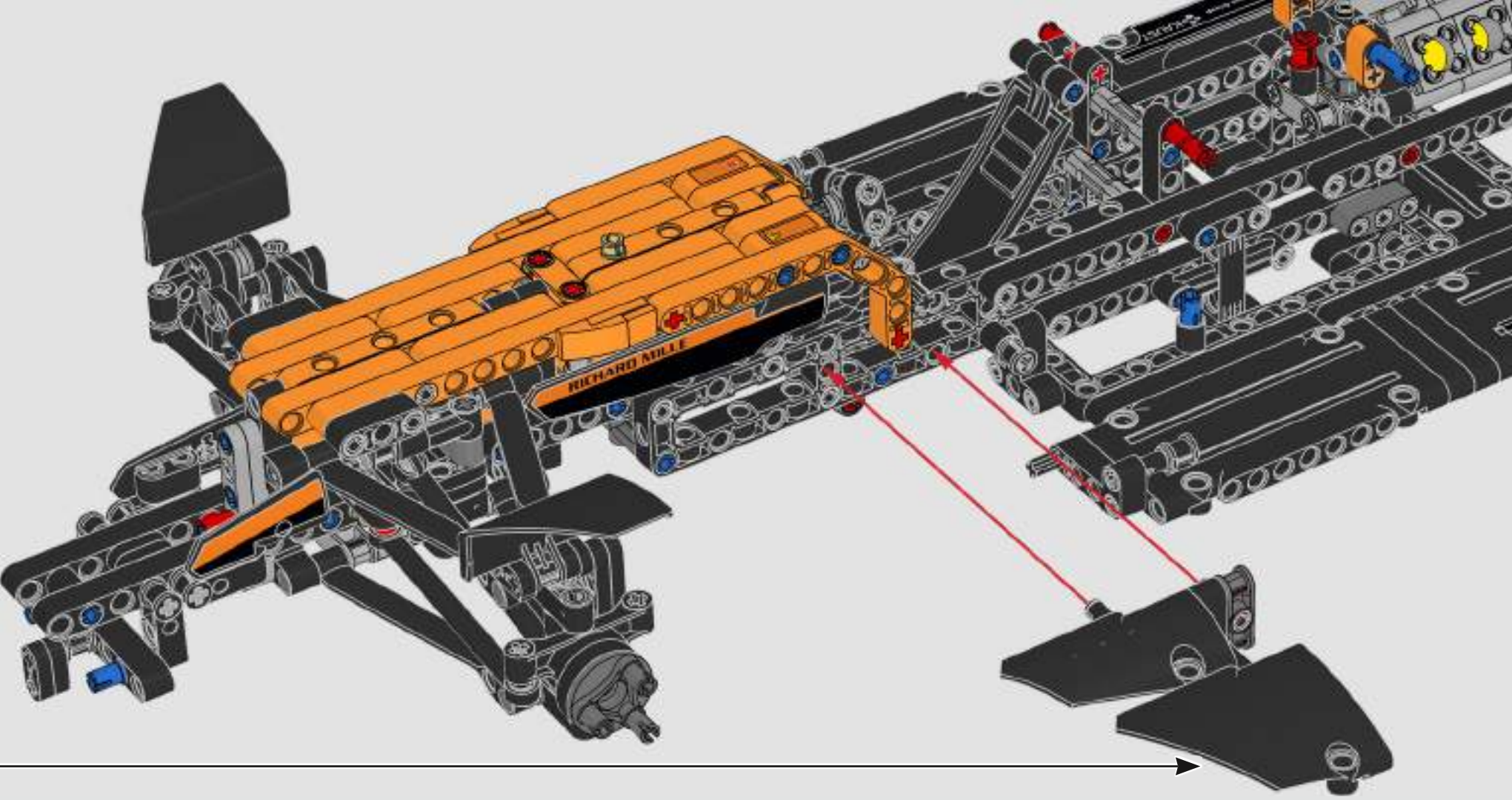
RICHARD MILLE

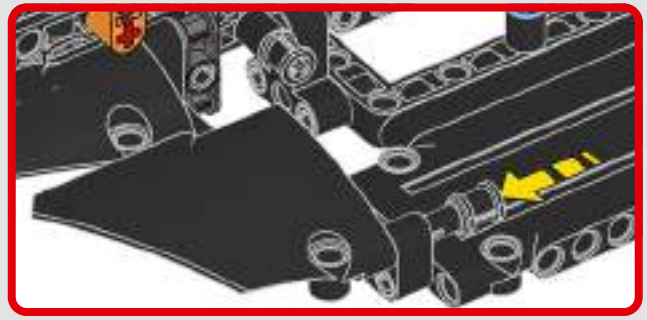

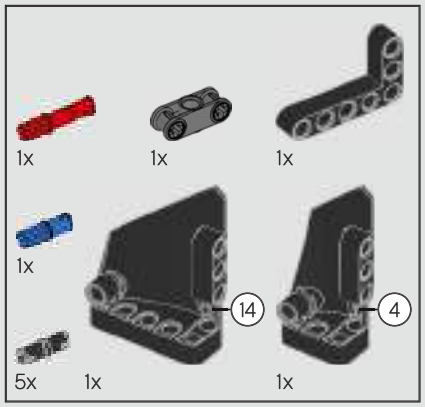

188

1

2

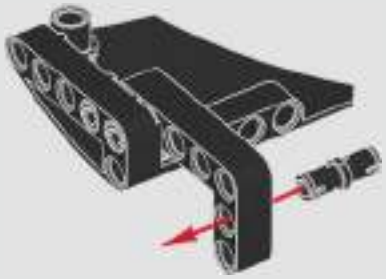

3

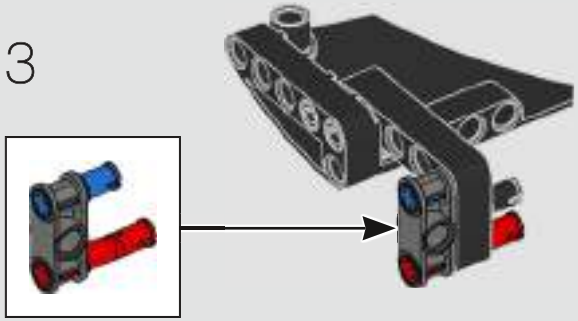

4

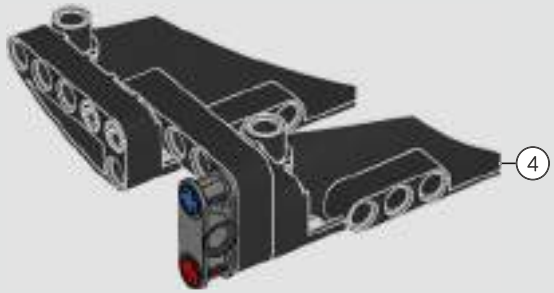

5

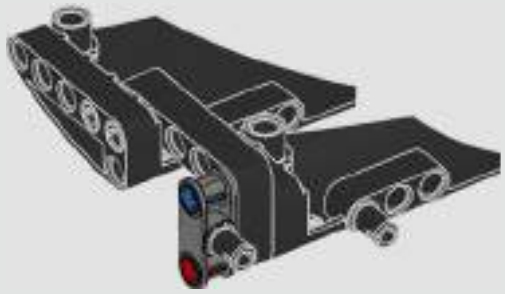

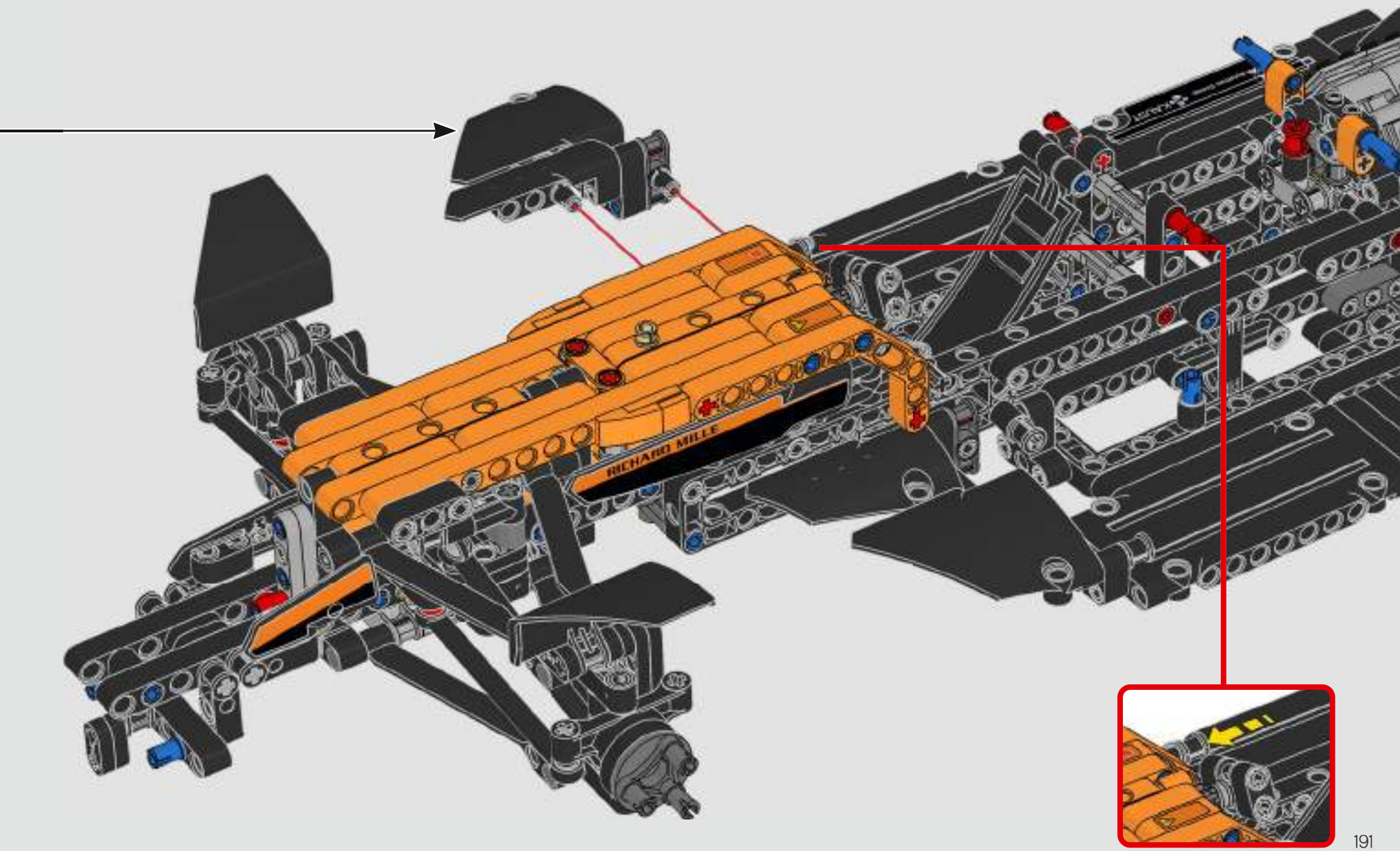
RICHARD MILLE

189

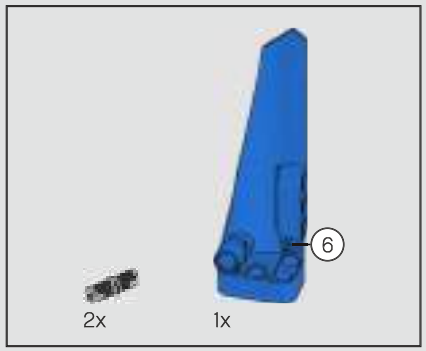

190

191

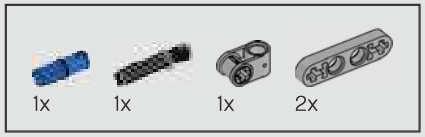

192

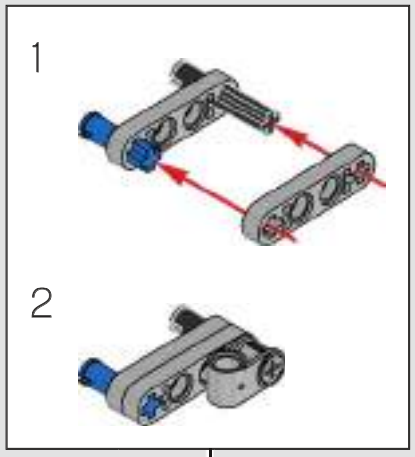

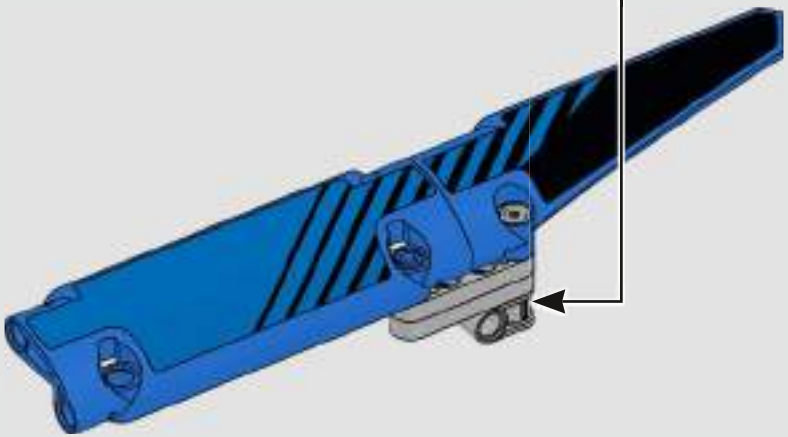

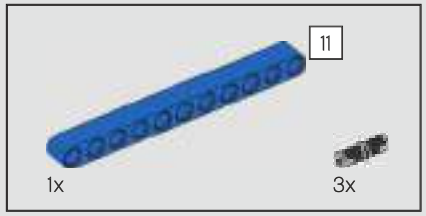

193

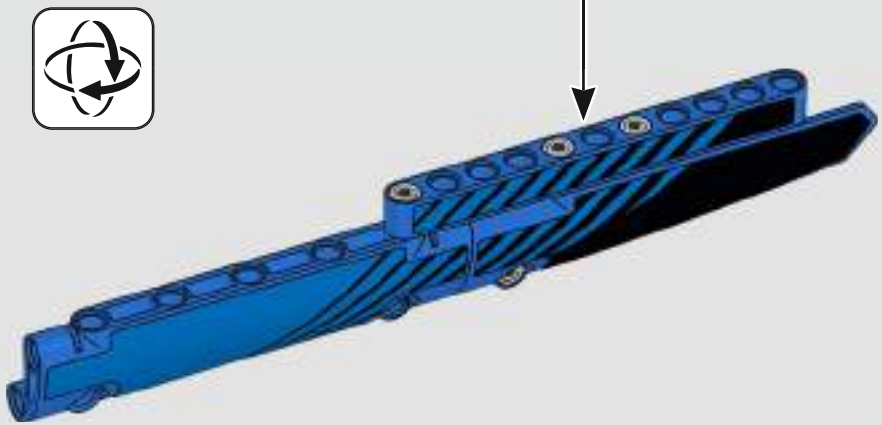

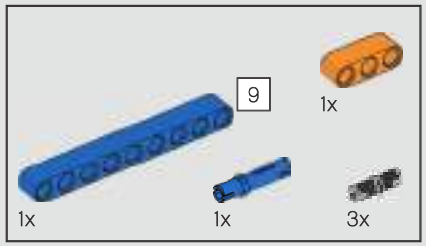

194

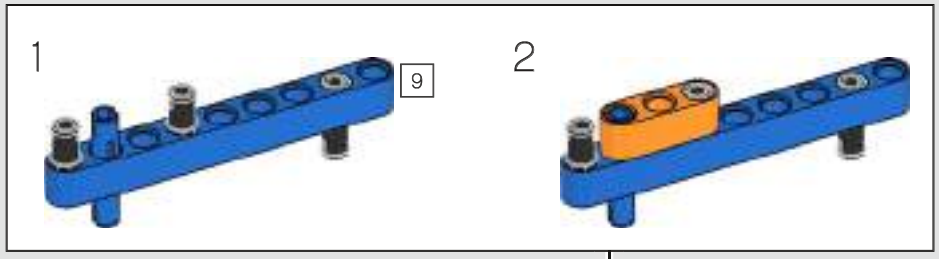

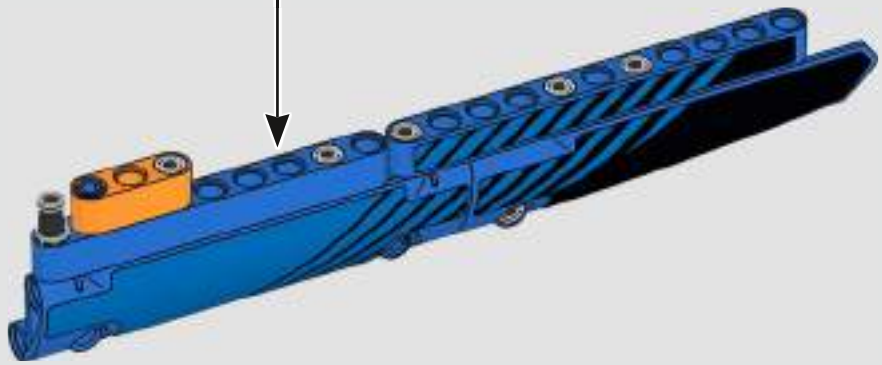

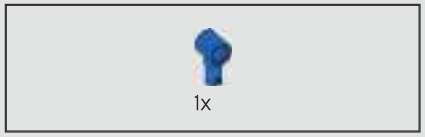

195

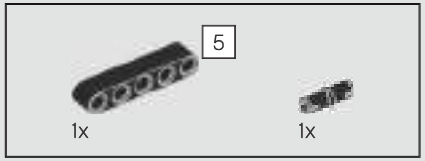

196

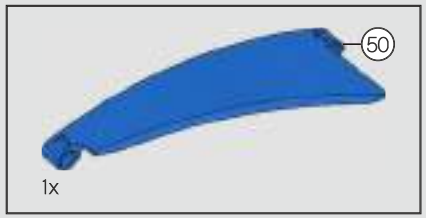

197

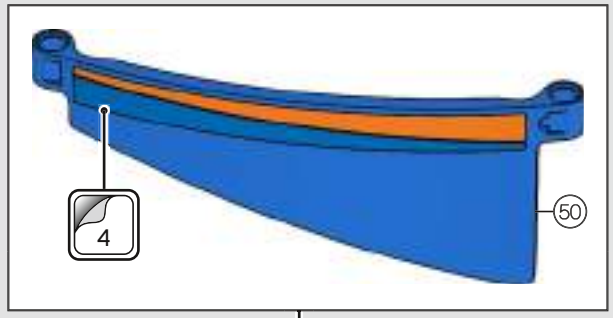

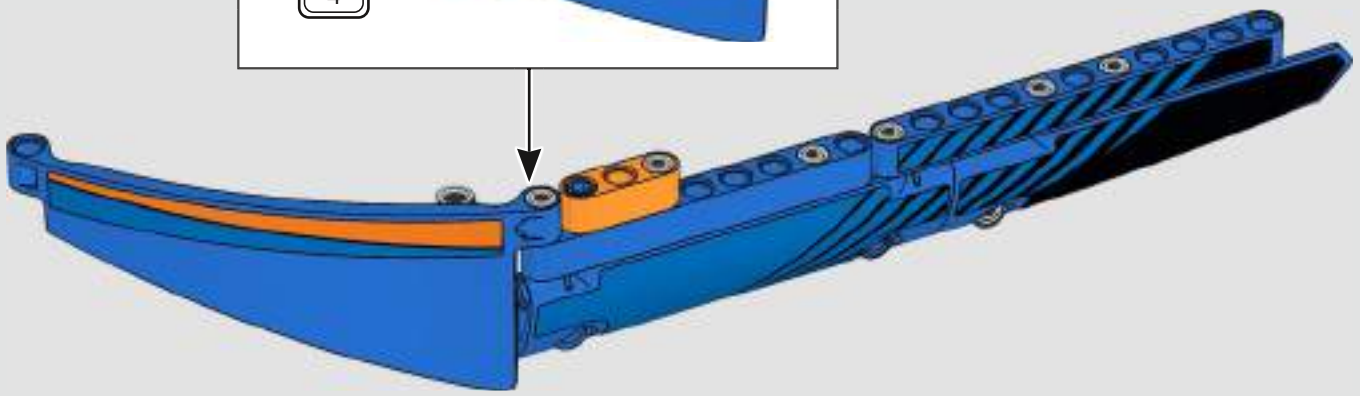

198

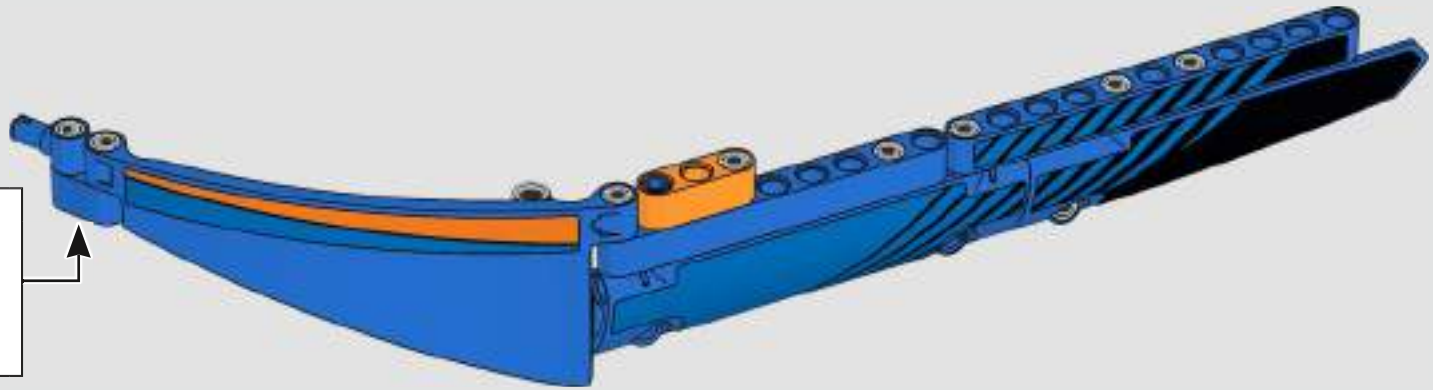

199

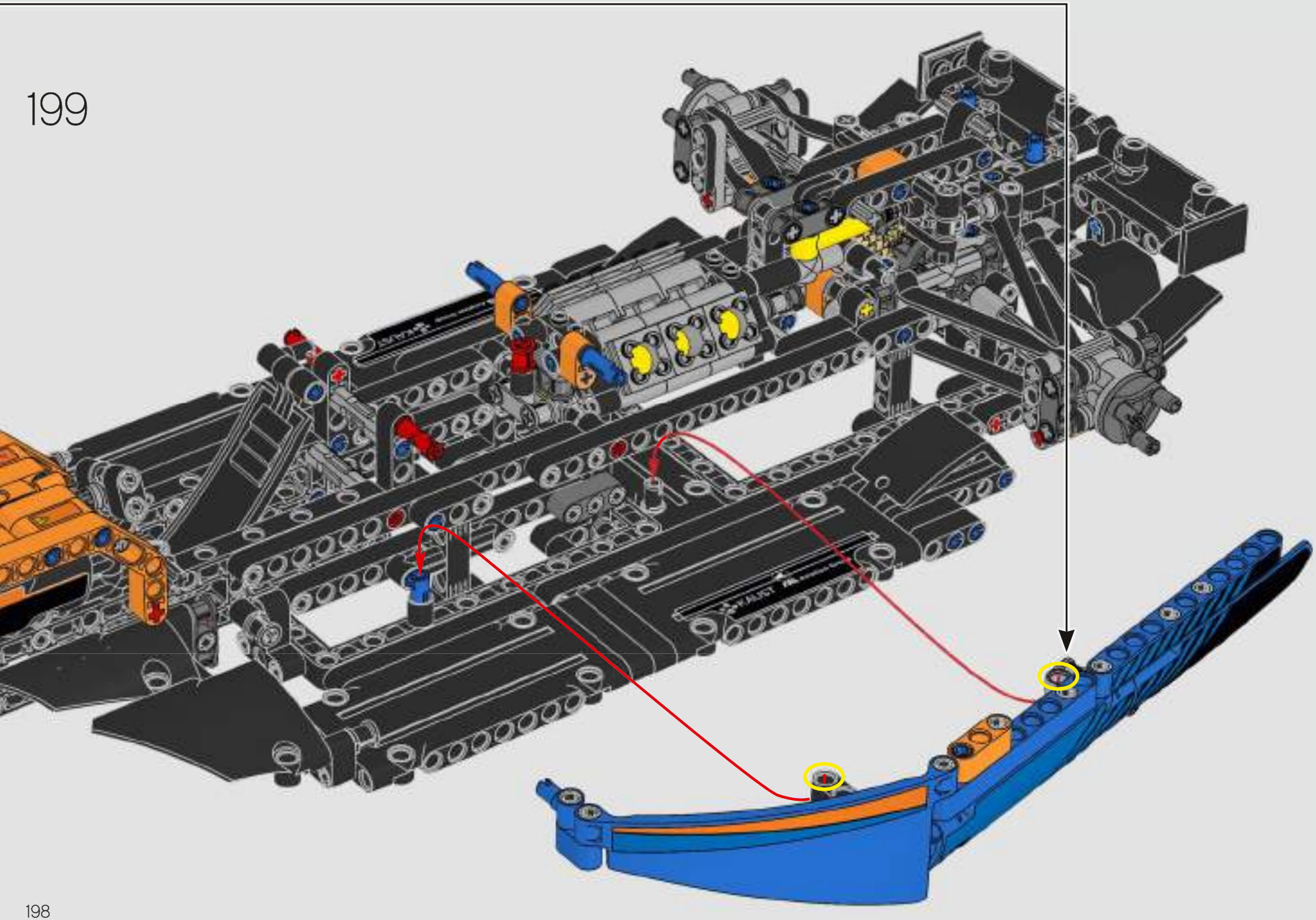

200

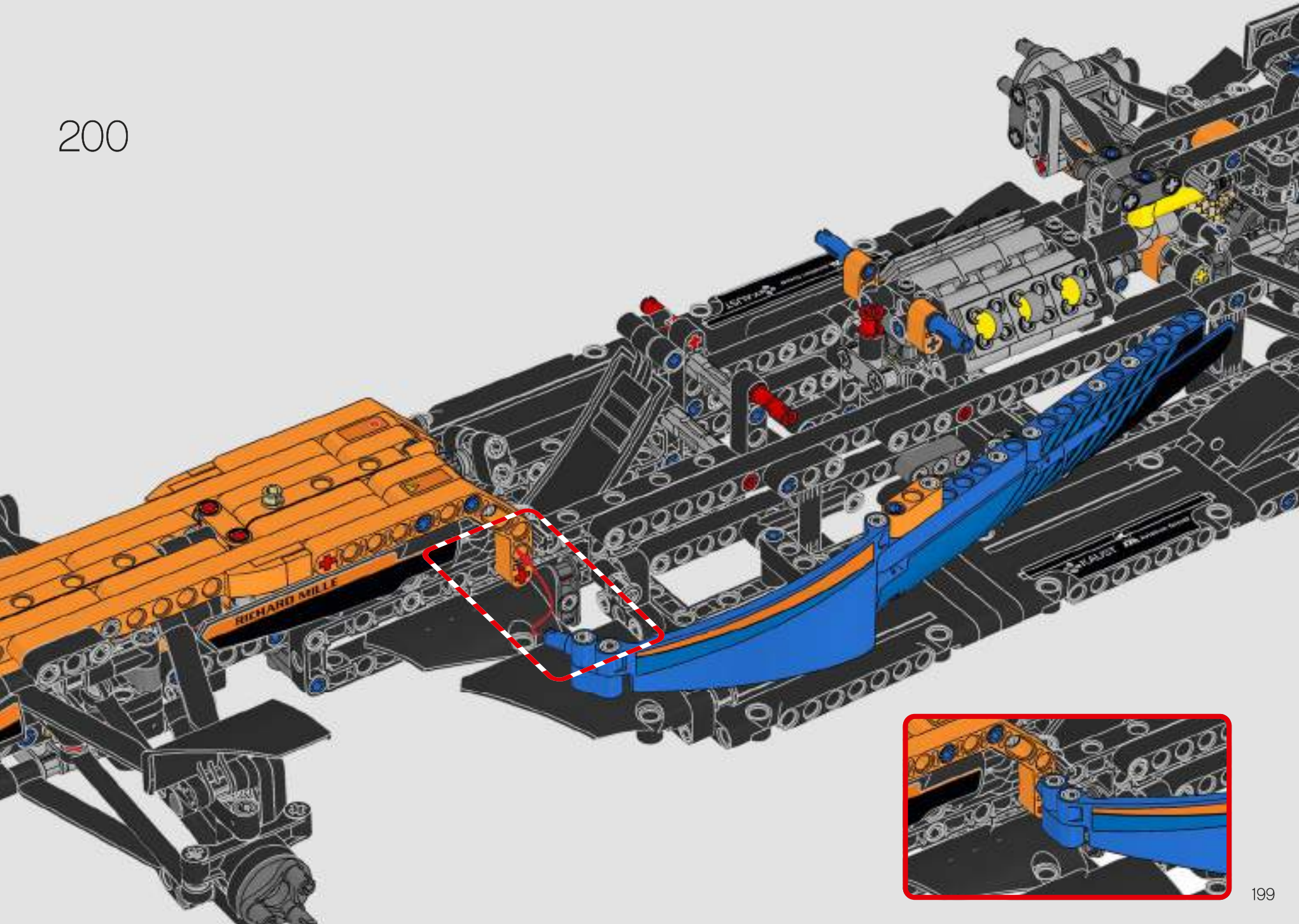

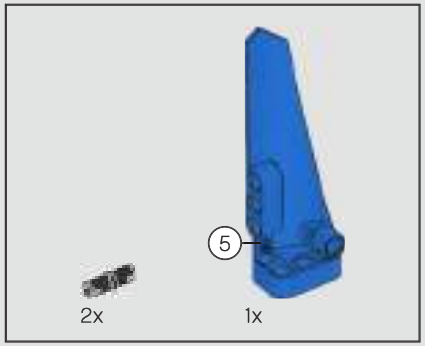

201

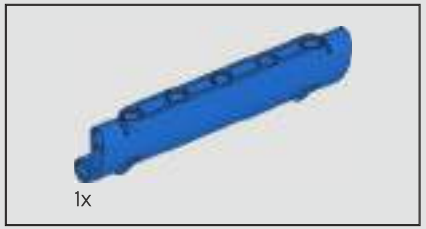

202

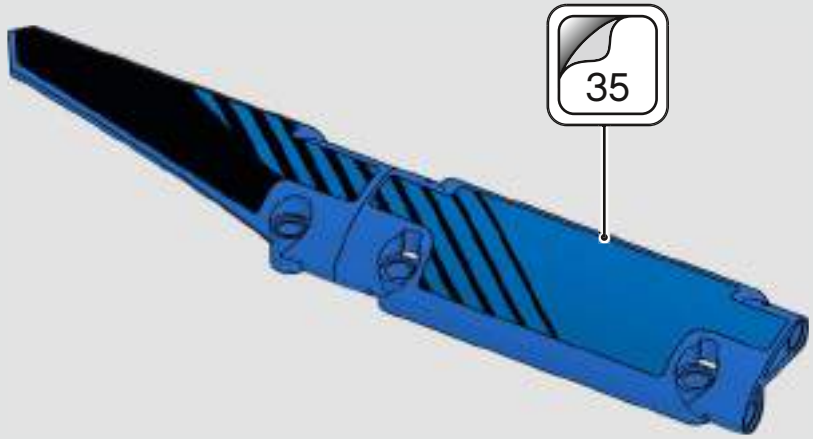

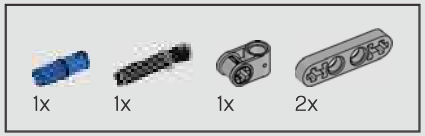

203

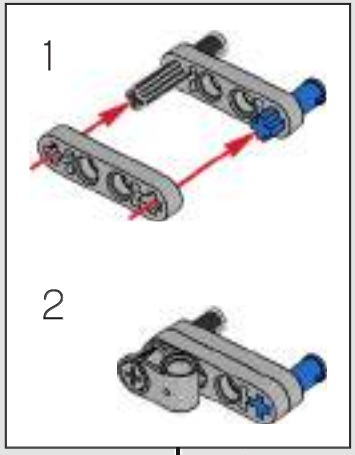

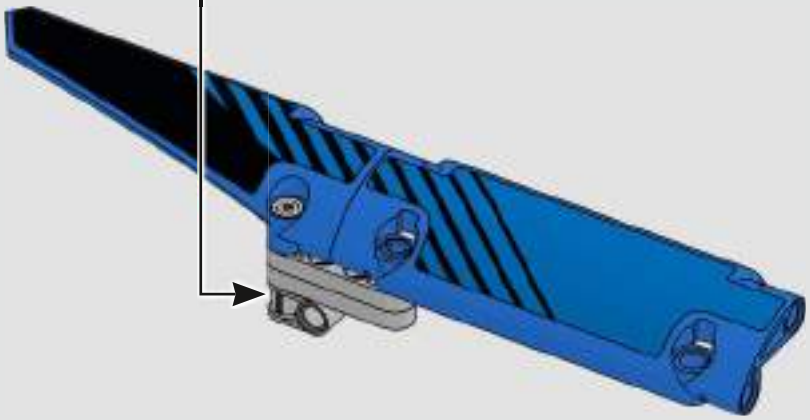

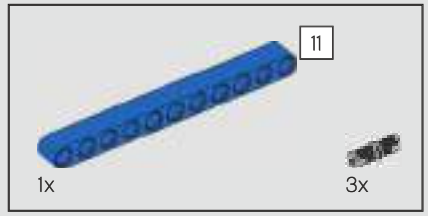

204

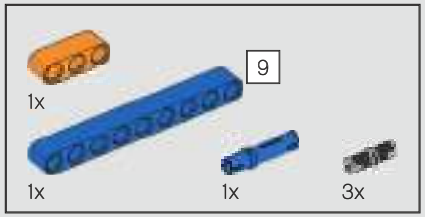

205

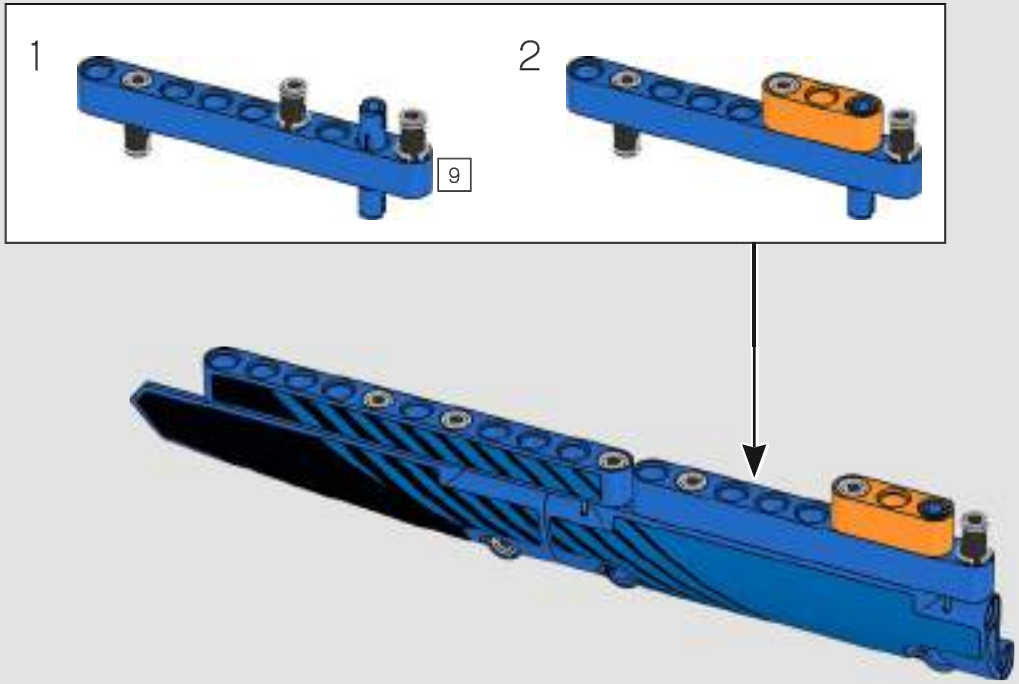

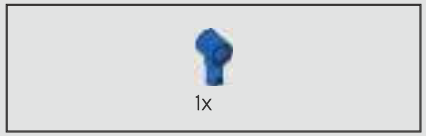

206

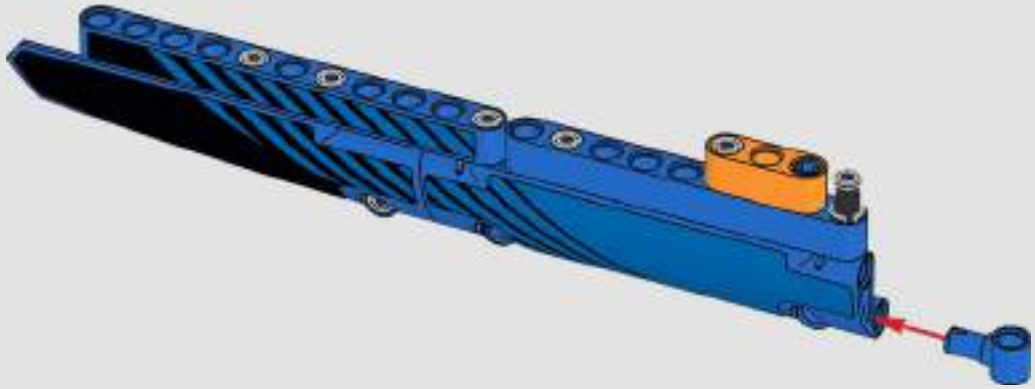

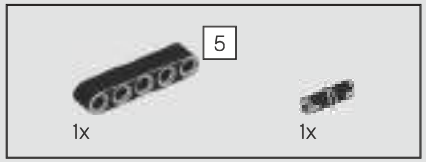

207

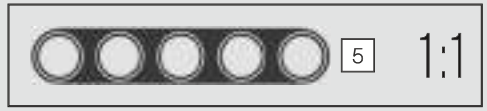

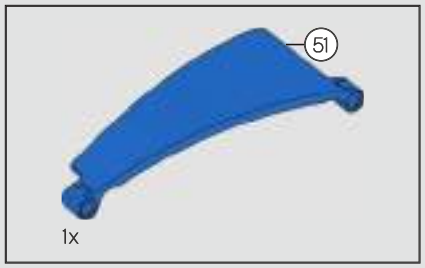

208

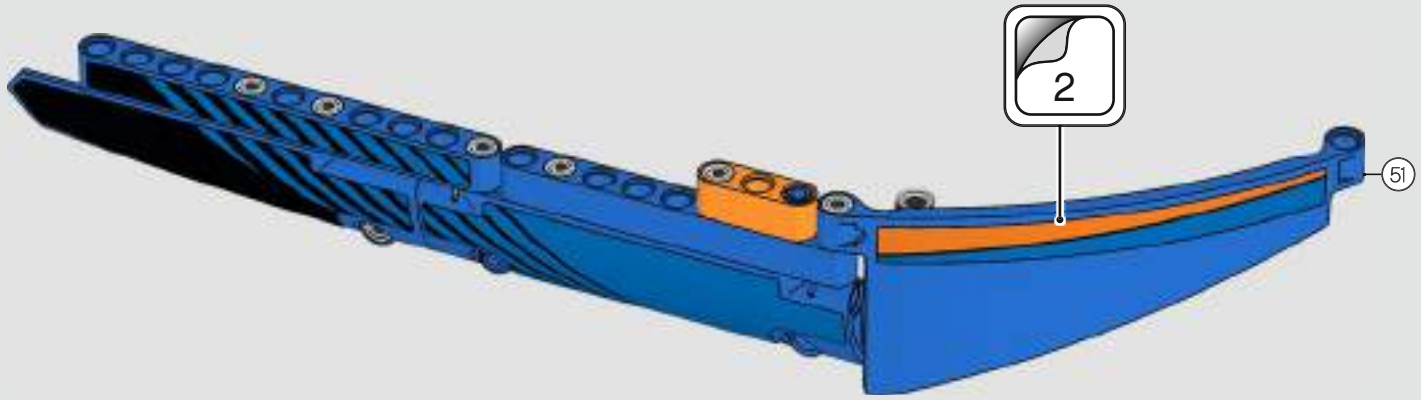

209

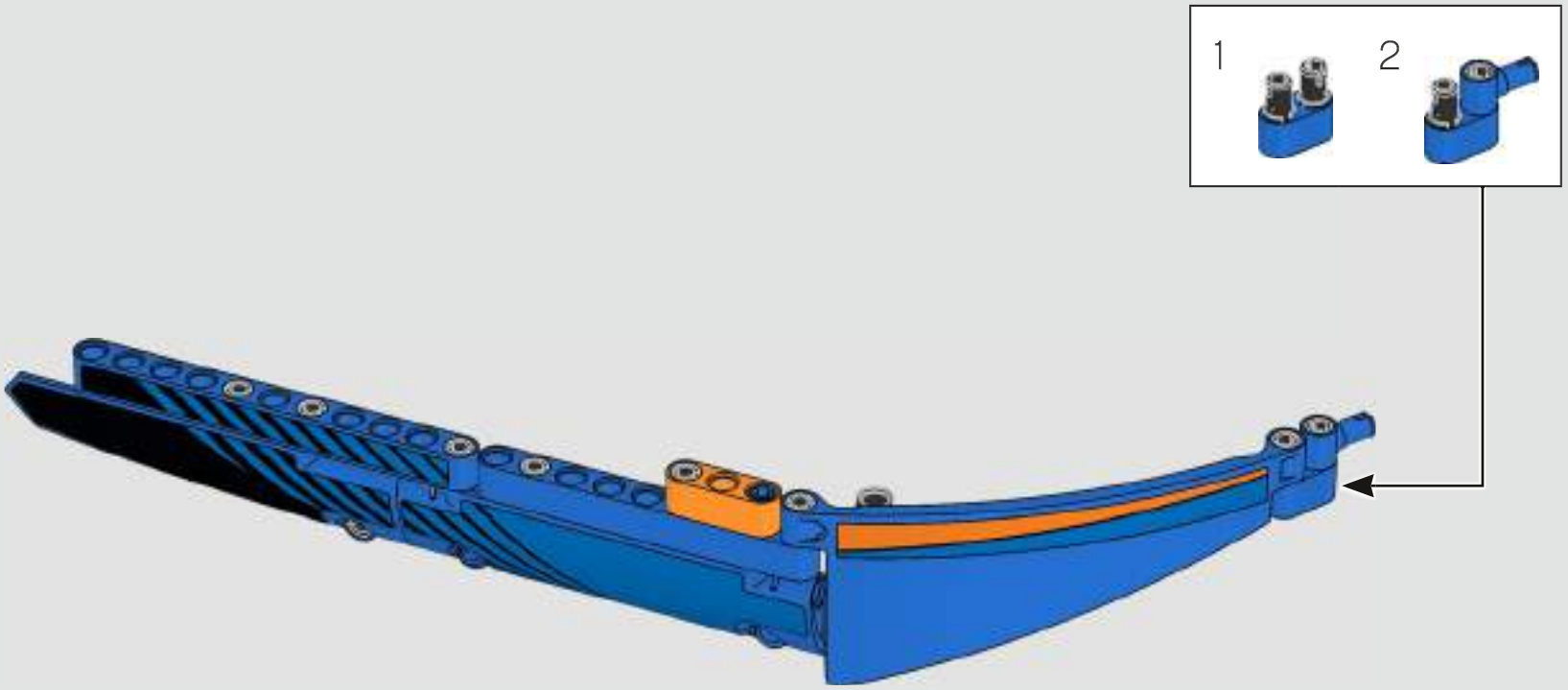

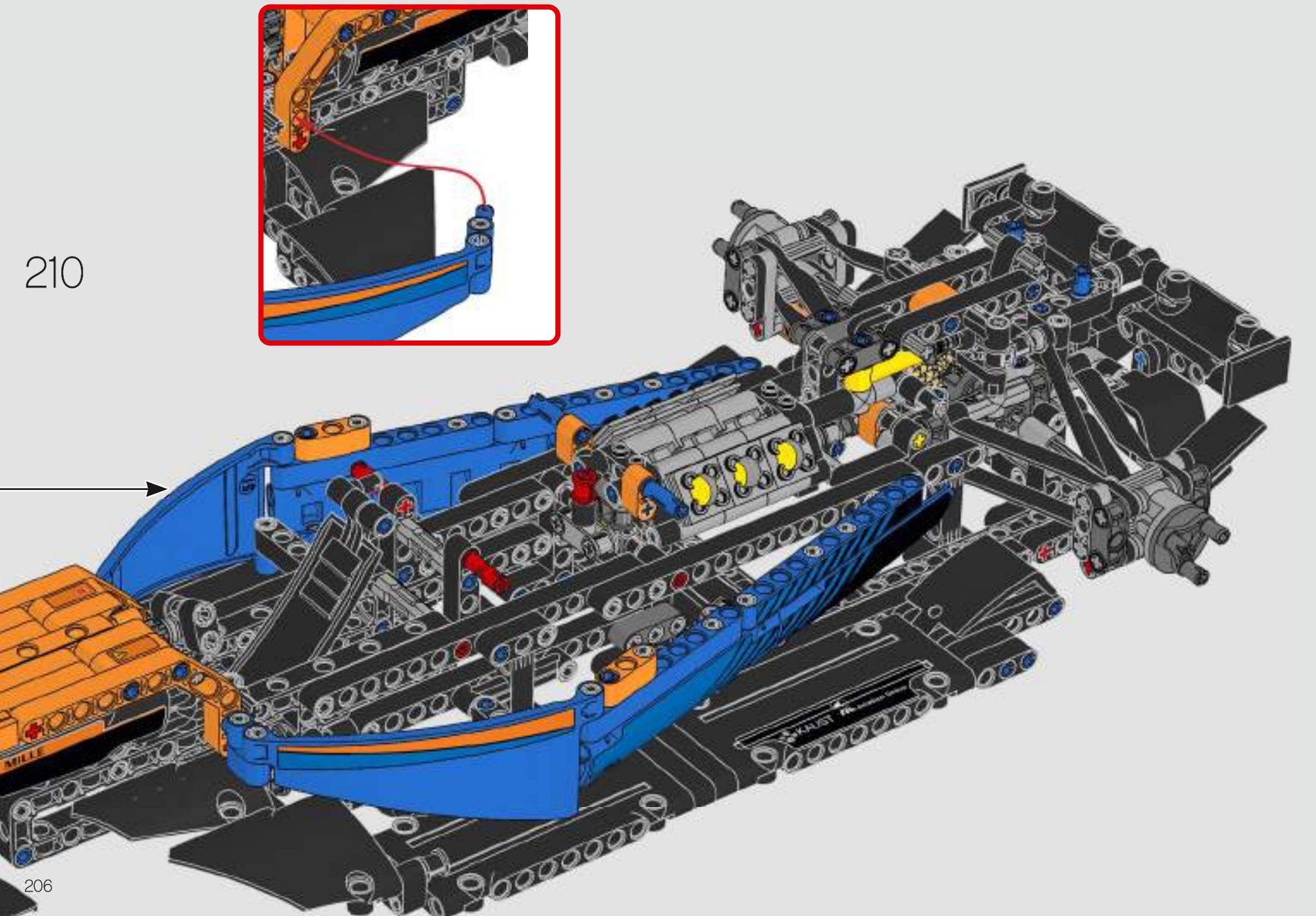
210

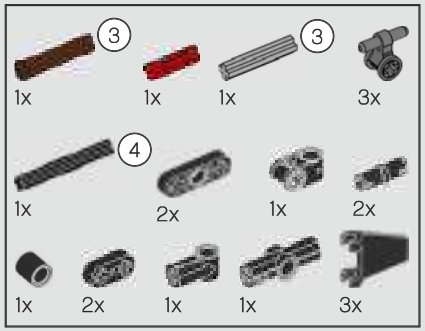

211

1

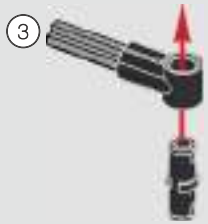

2

3

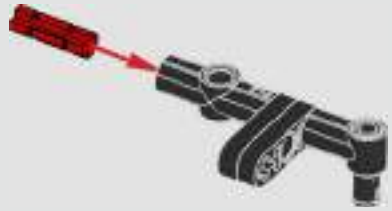

4

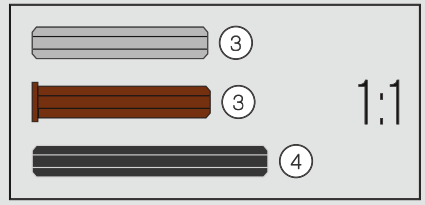

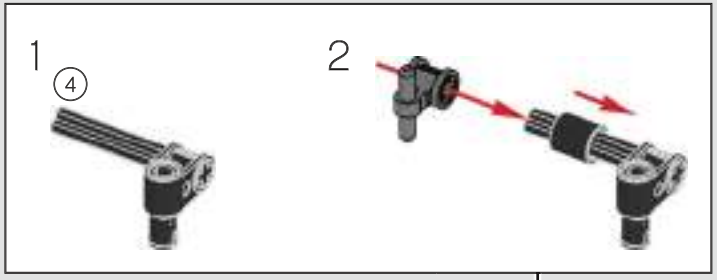

5

6

7

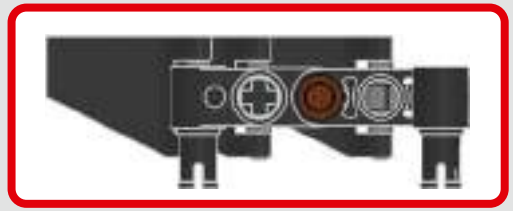

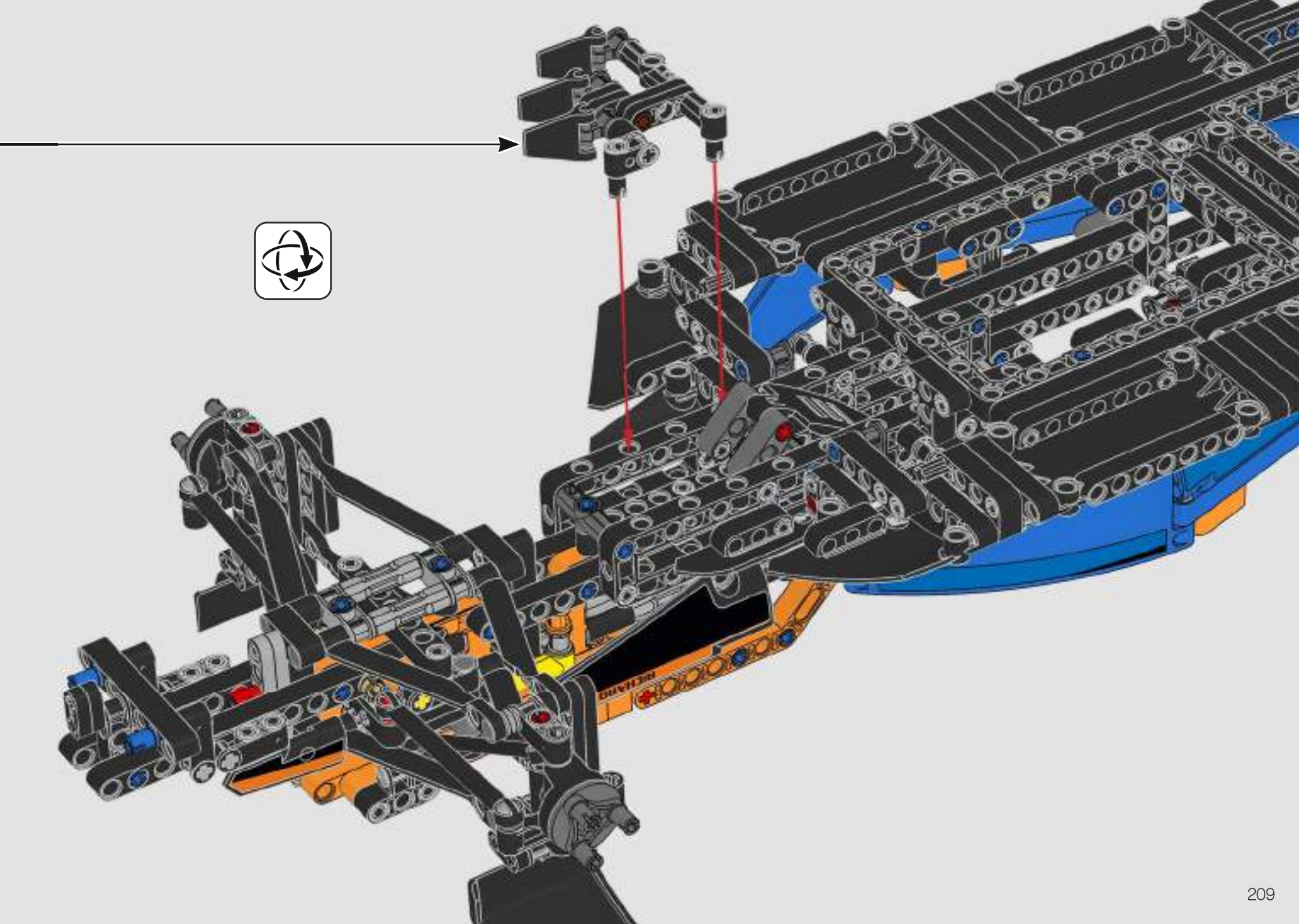

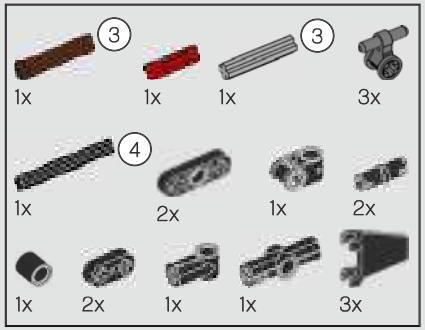

212

1

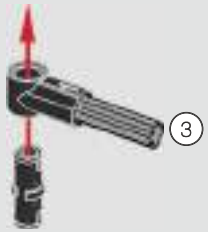

2

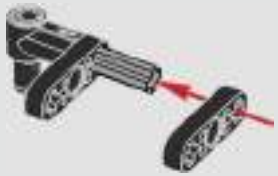

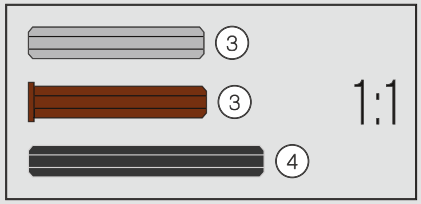

3

4

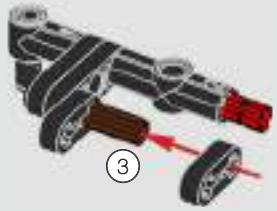

5

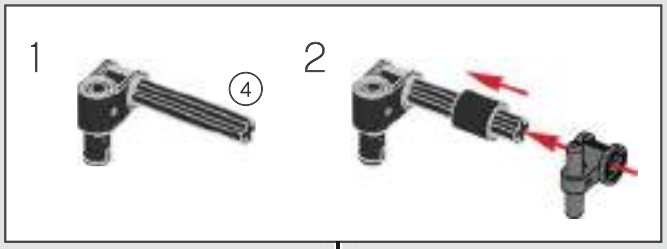

6

7

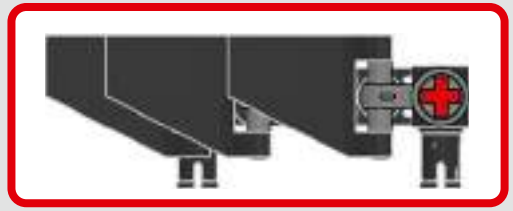

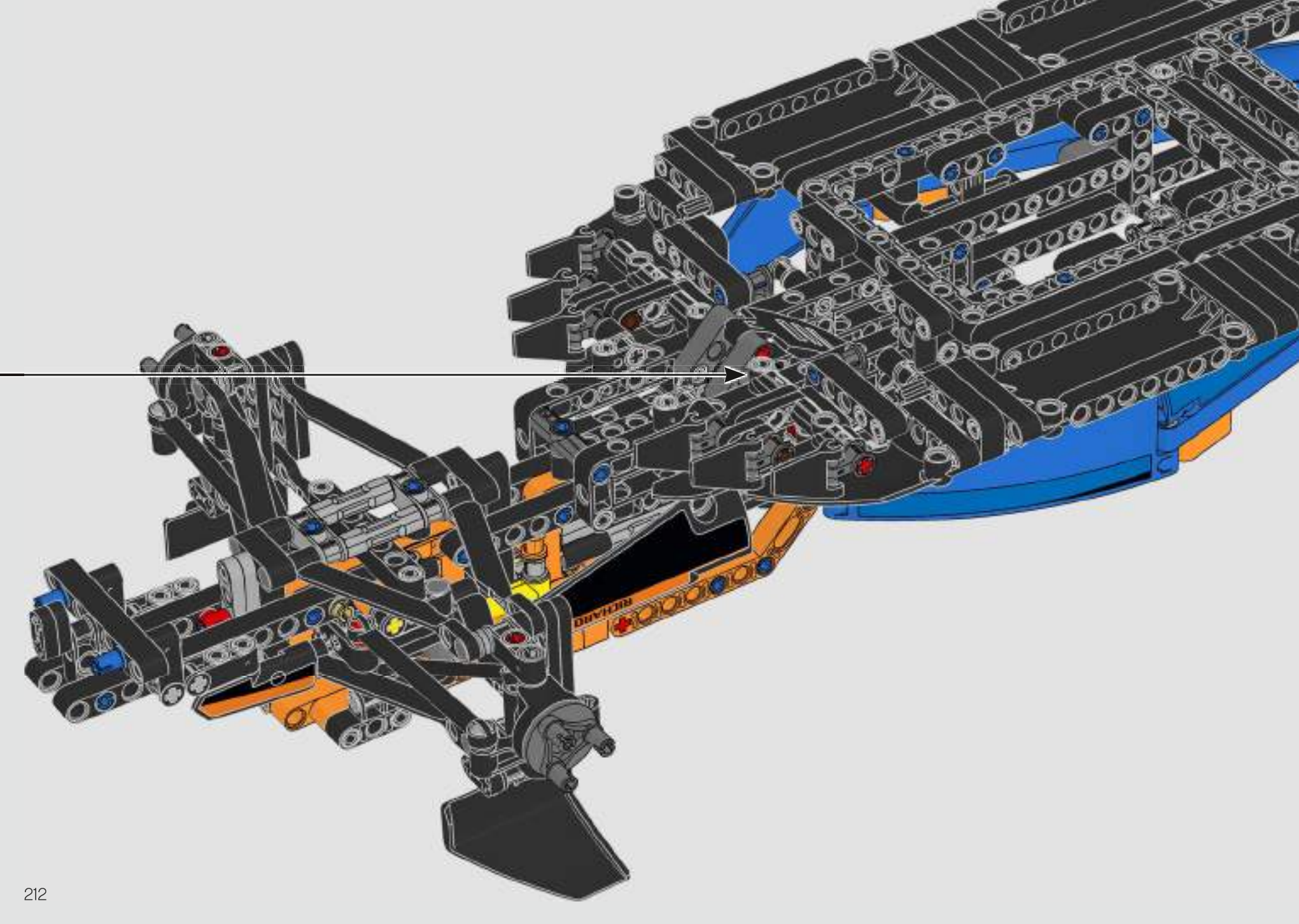

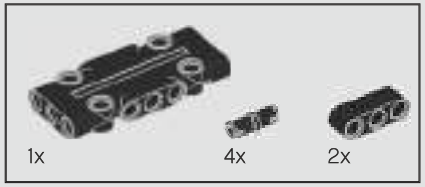

213

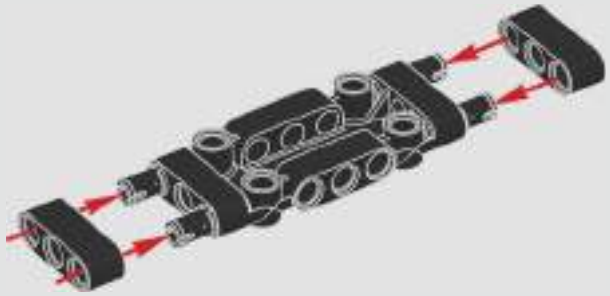

214

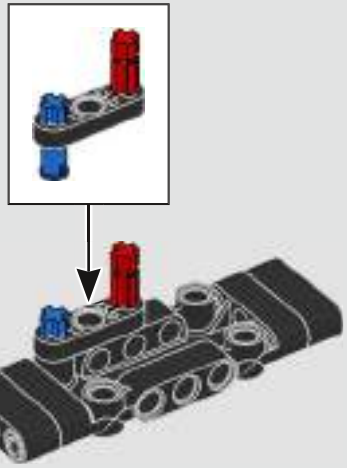

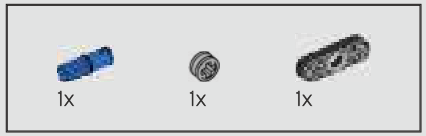

215

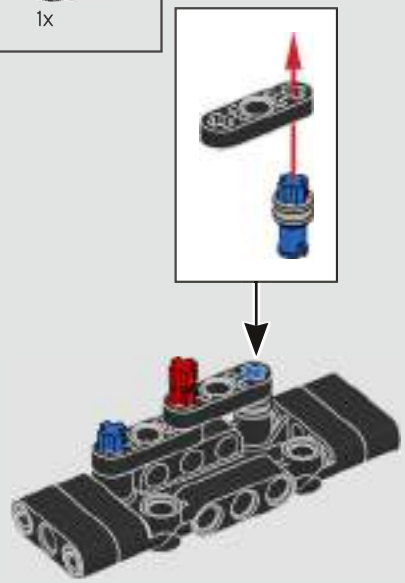

216

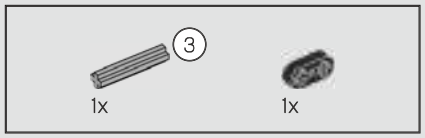

217

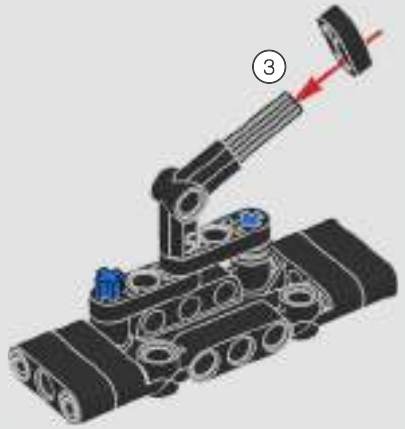

218

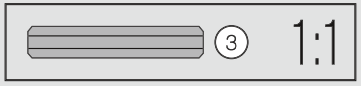

219

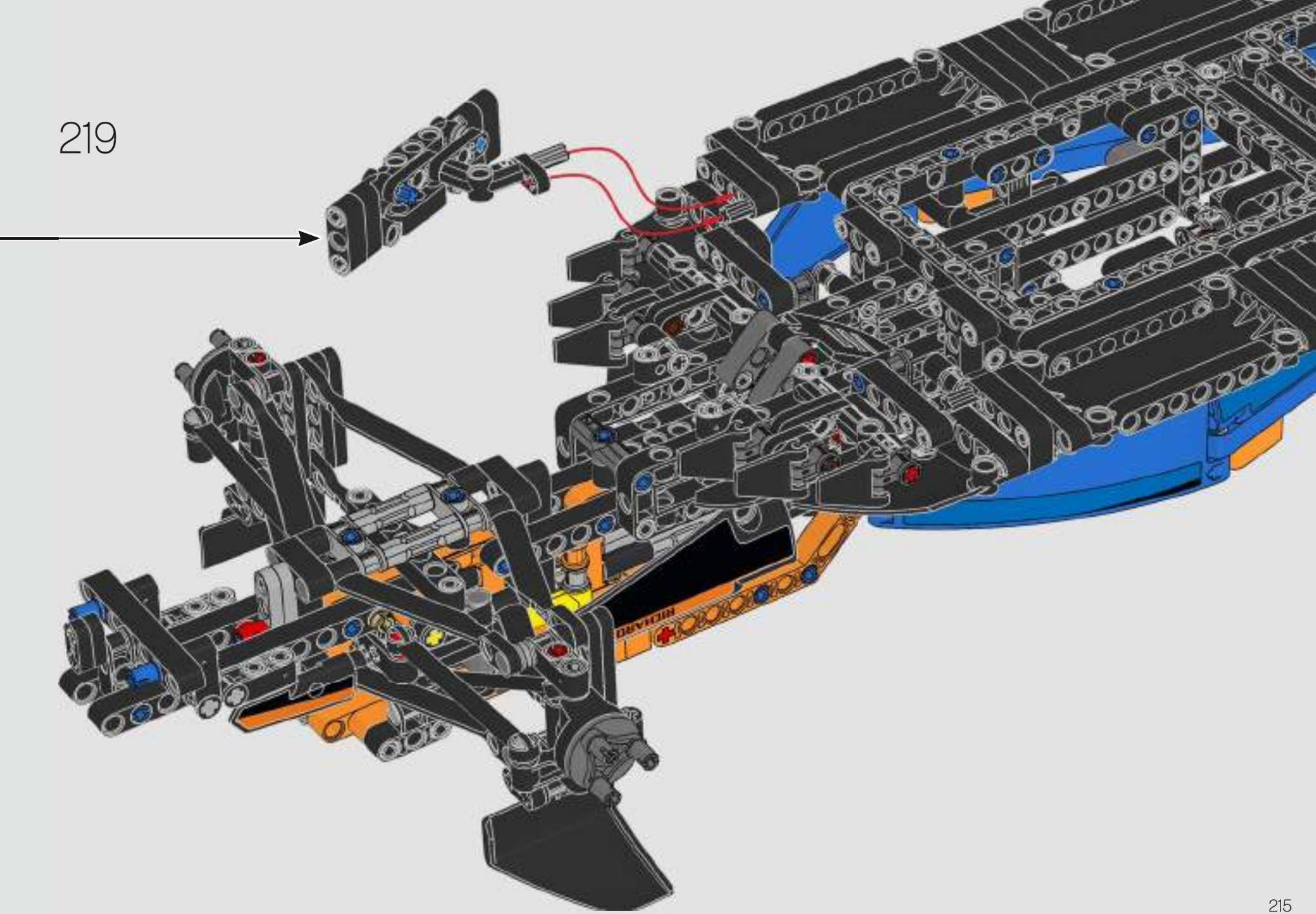

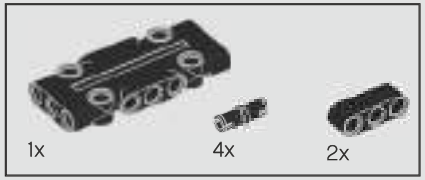

220

221

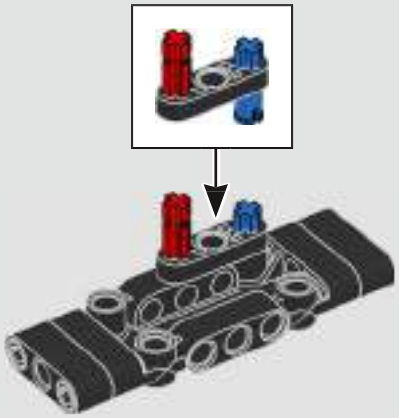

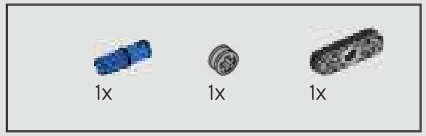

222

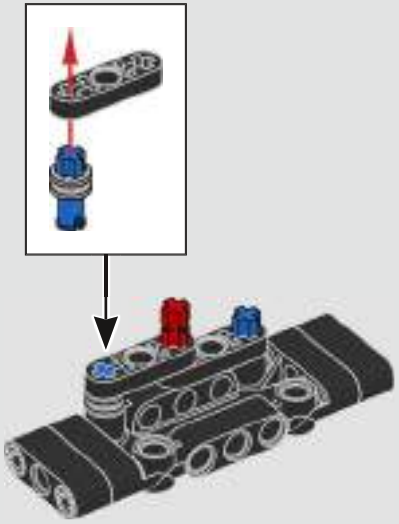

223

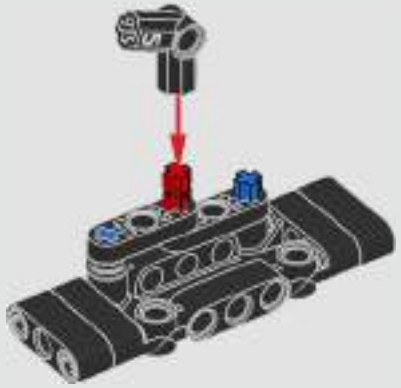

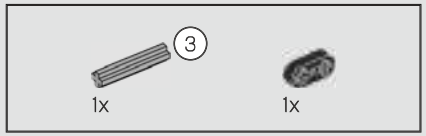

224

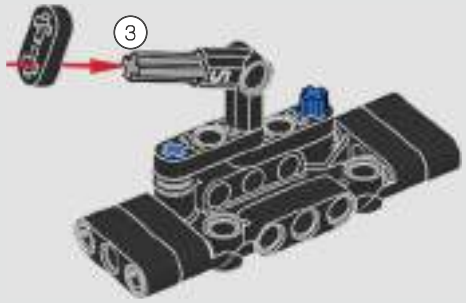

225

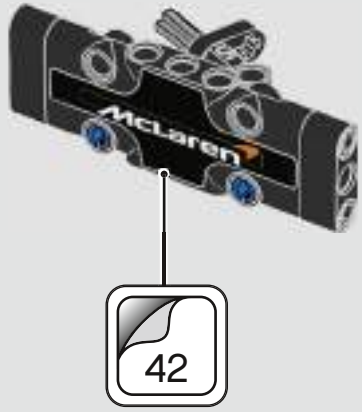

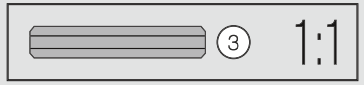

226

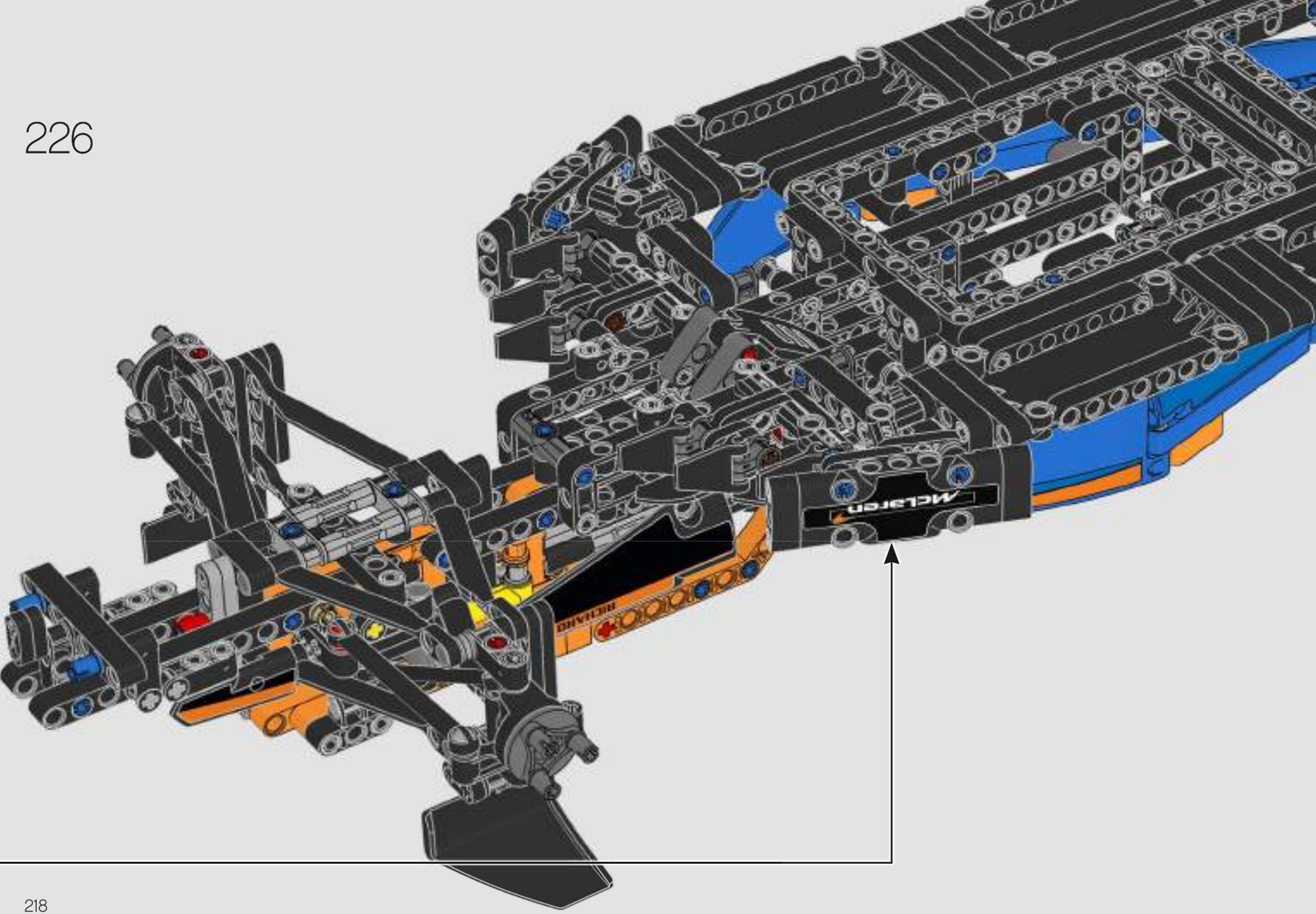

227

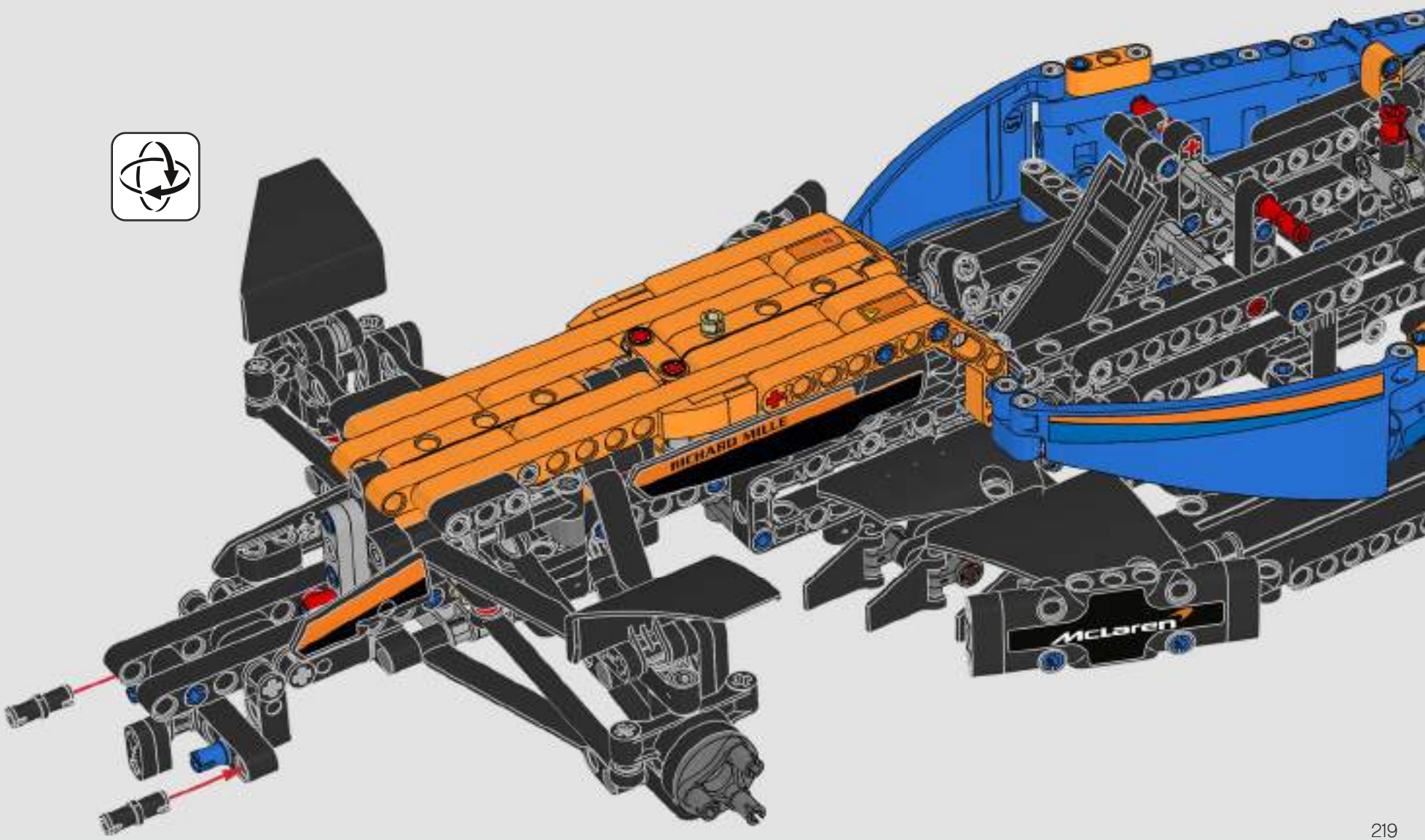

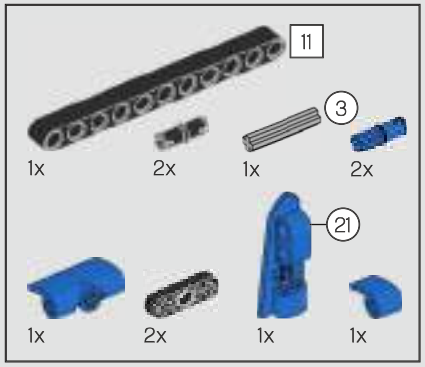

228

1

2

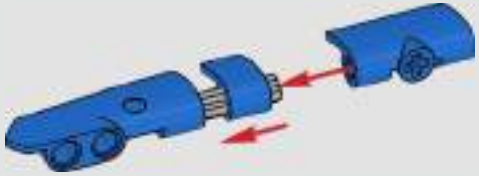

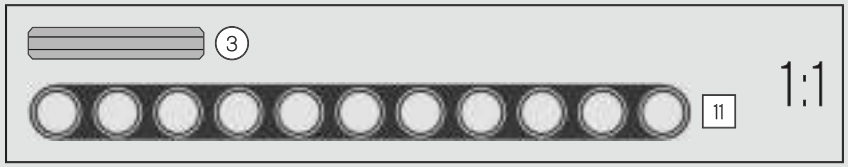

3

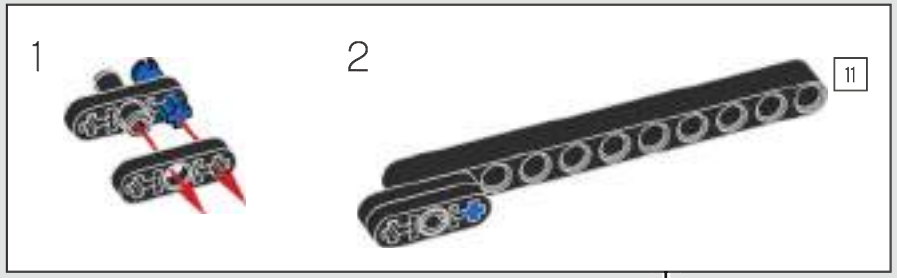

4

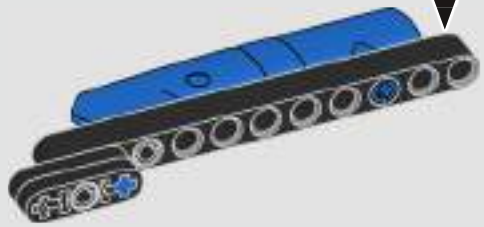

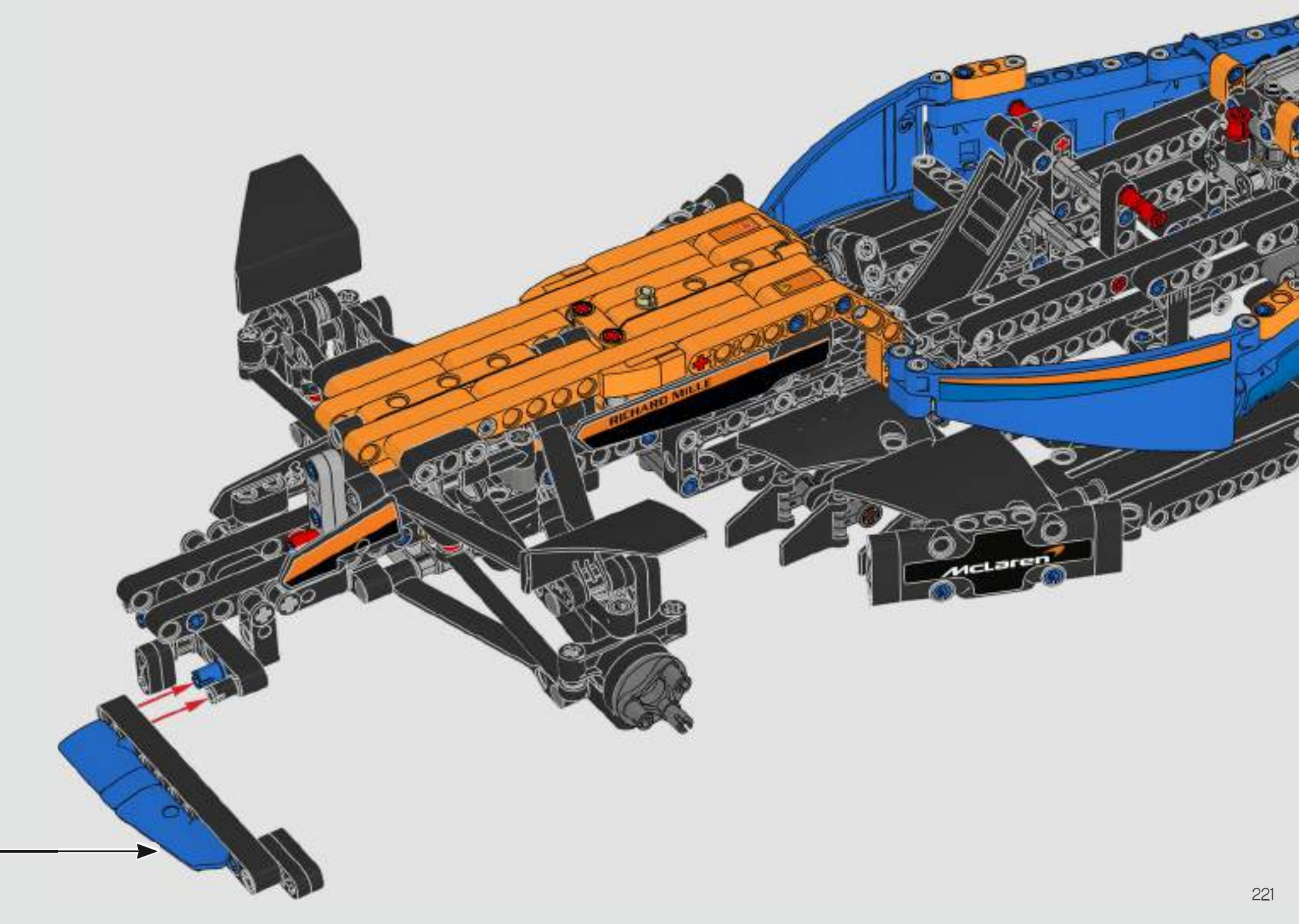
RICHARD MILLE
McLaren

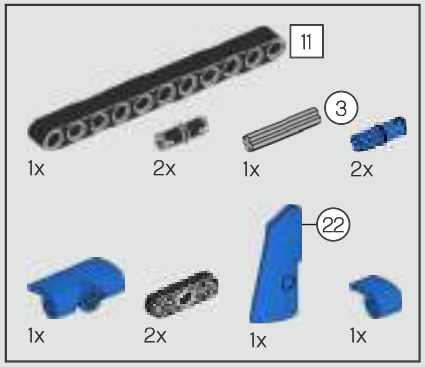

229

1

2

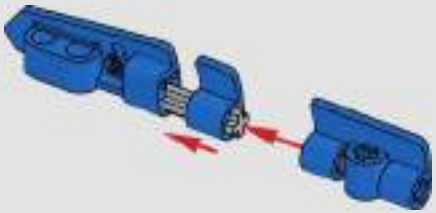

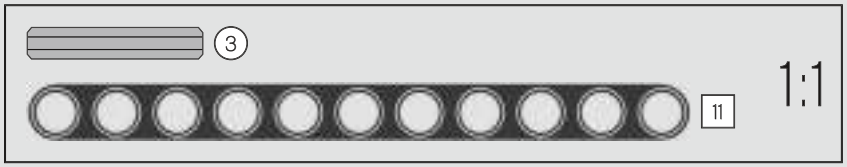

3

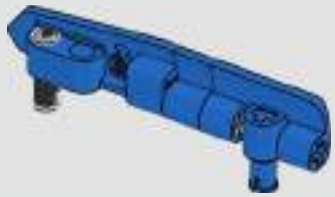

4

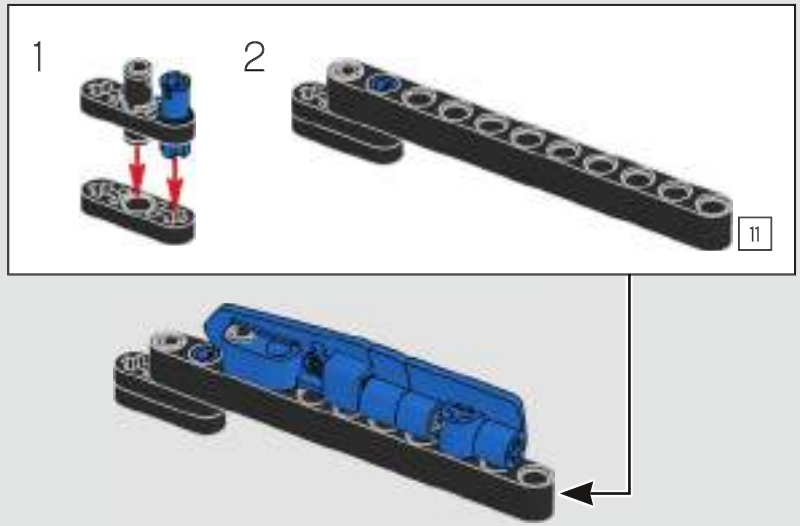

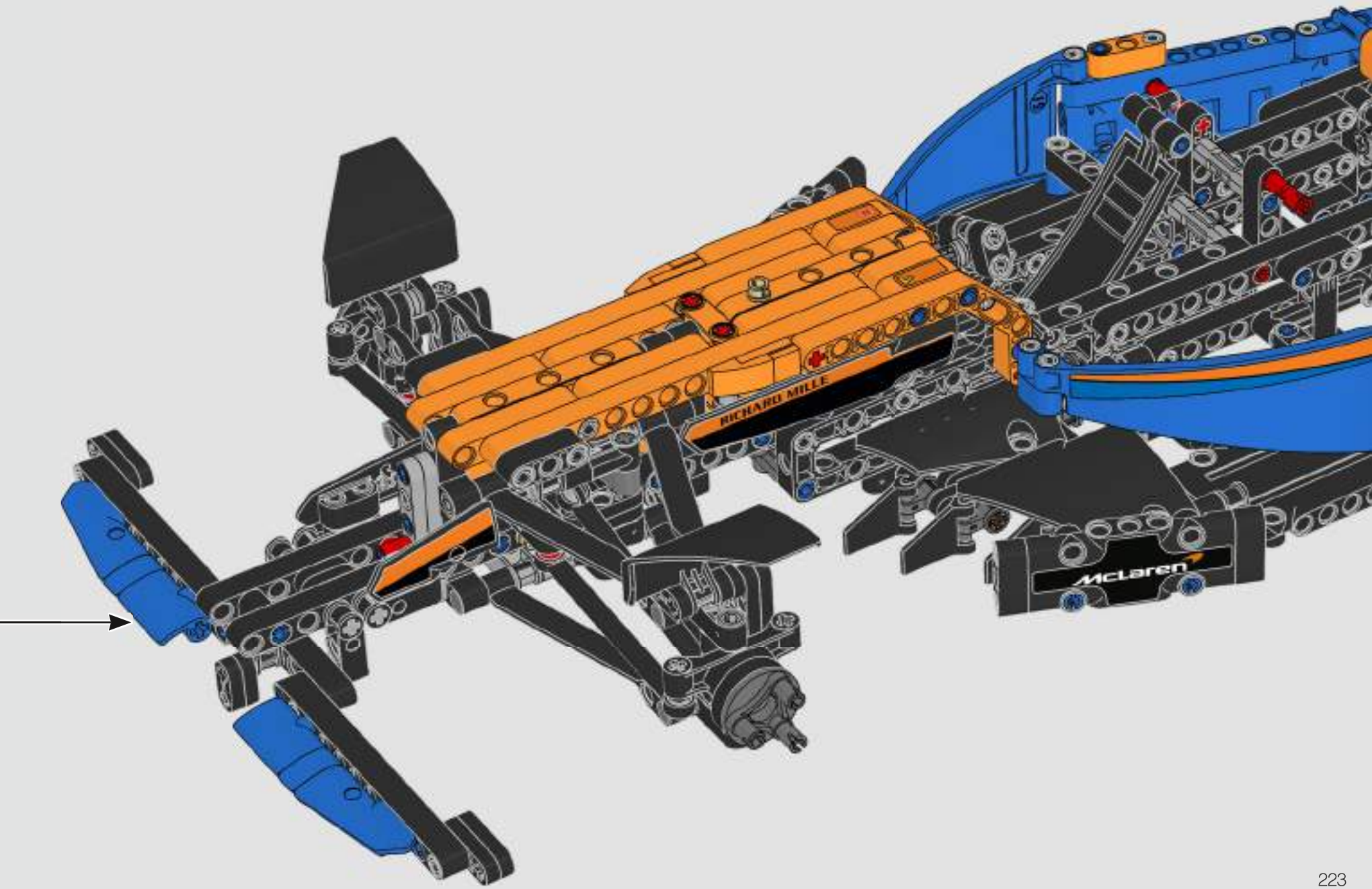
RICHARD MILLE
McLaren

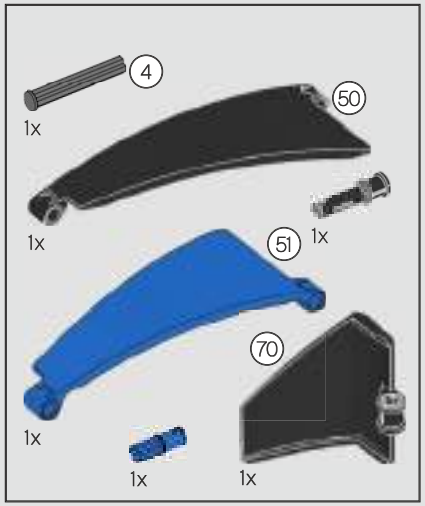

230

1

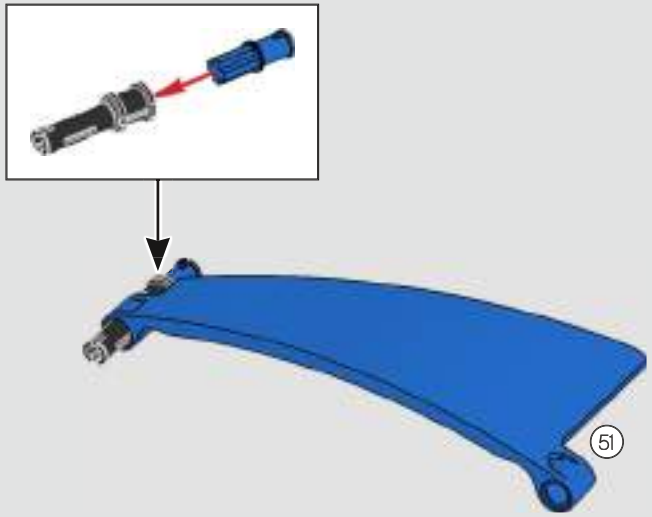

2

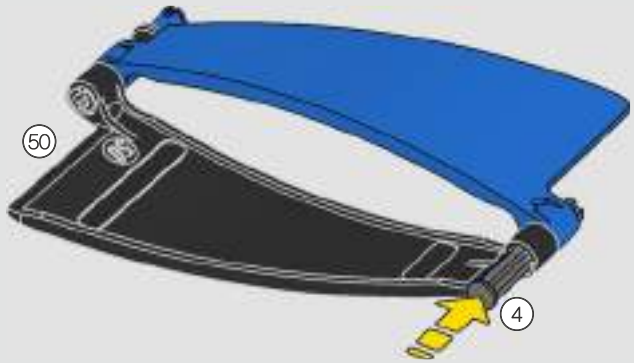

3

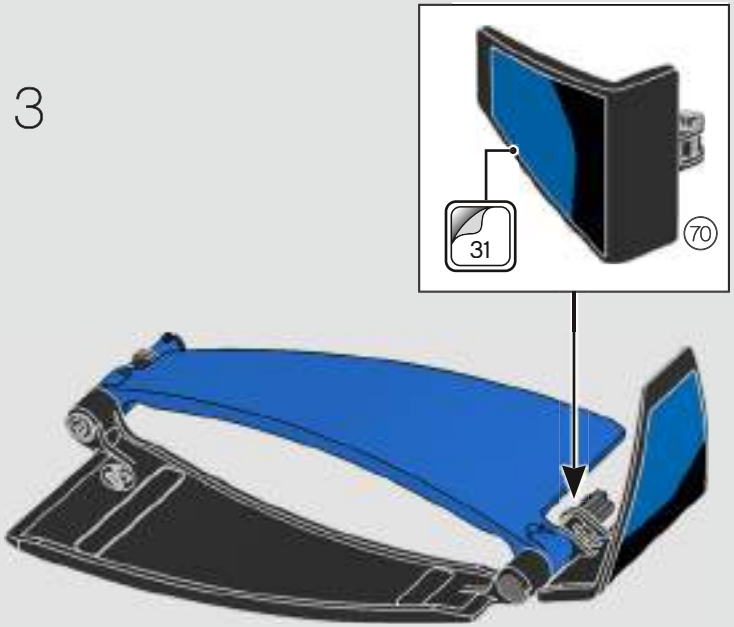

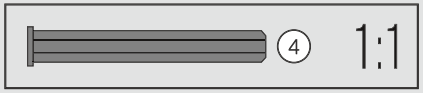

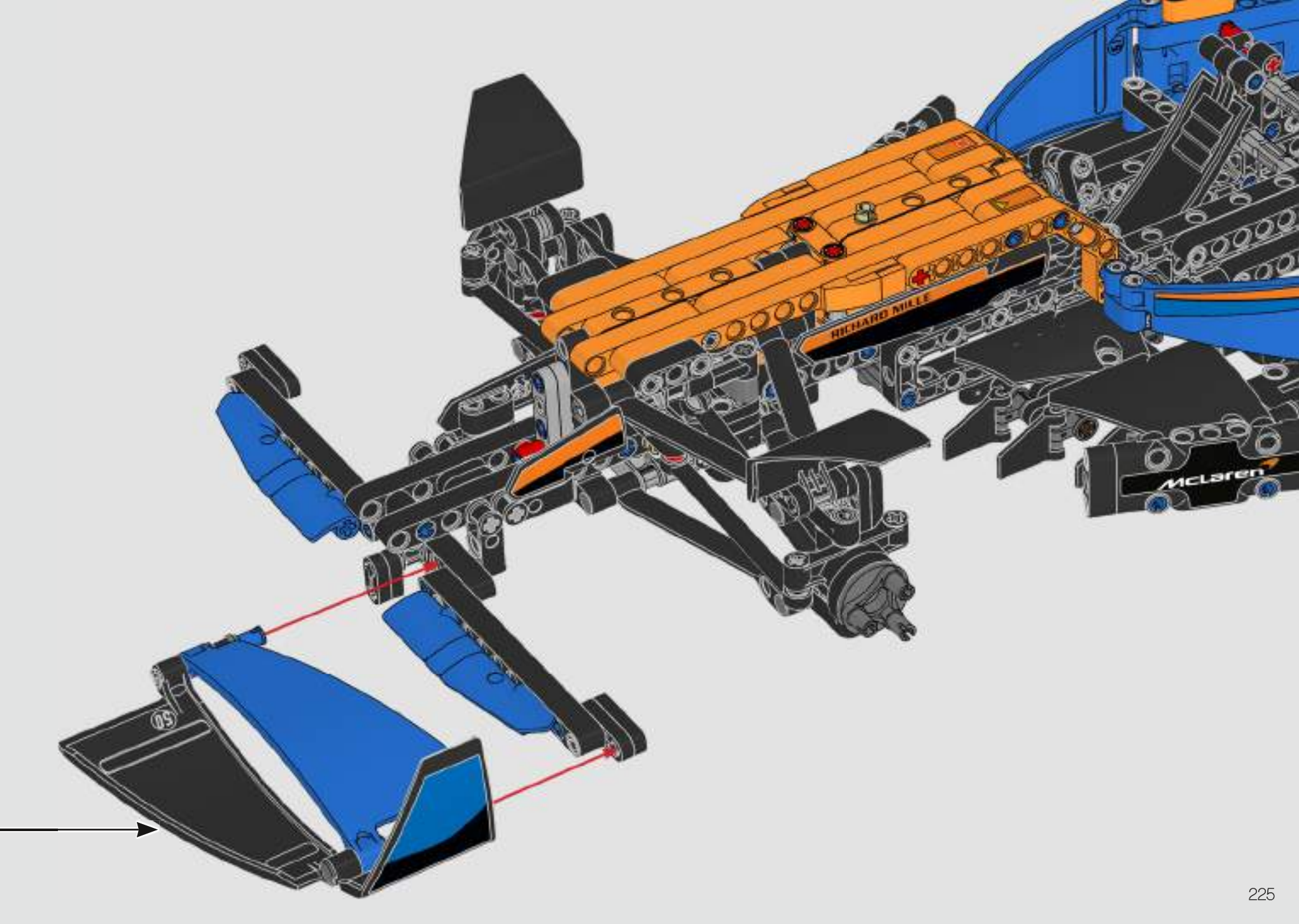
RICHARD MILLE
McLaren

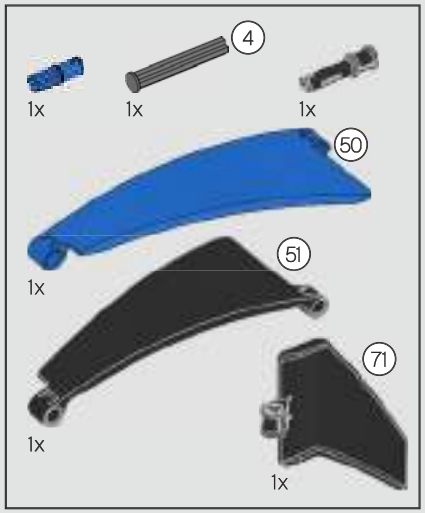

231

1

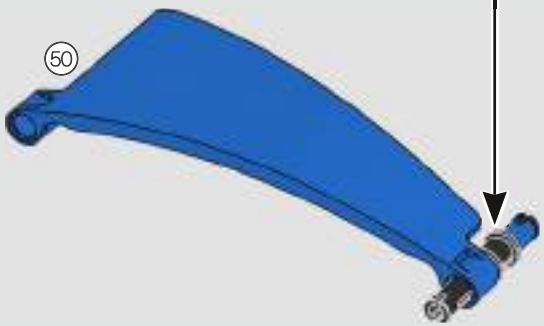

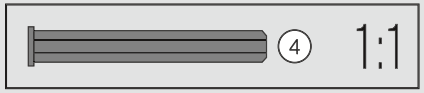

2

3

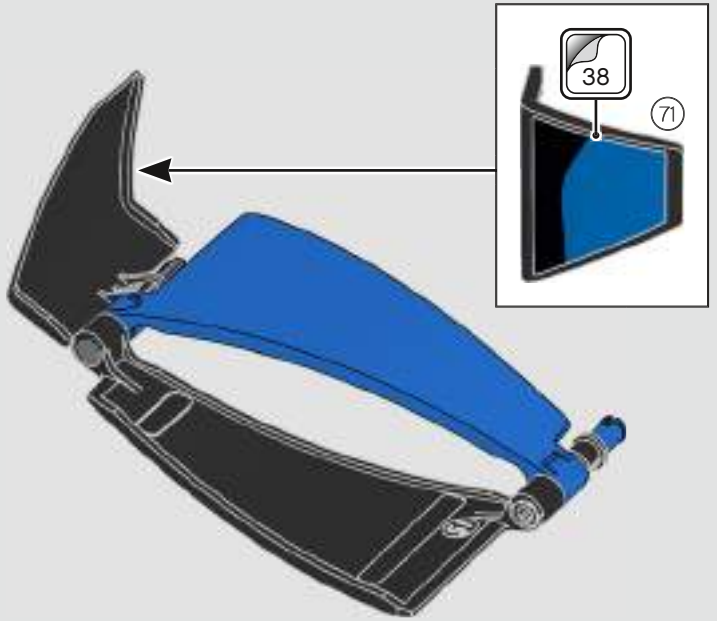

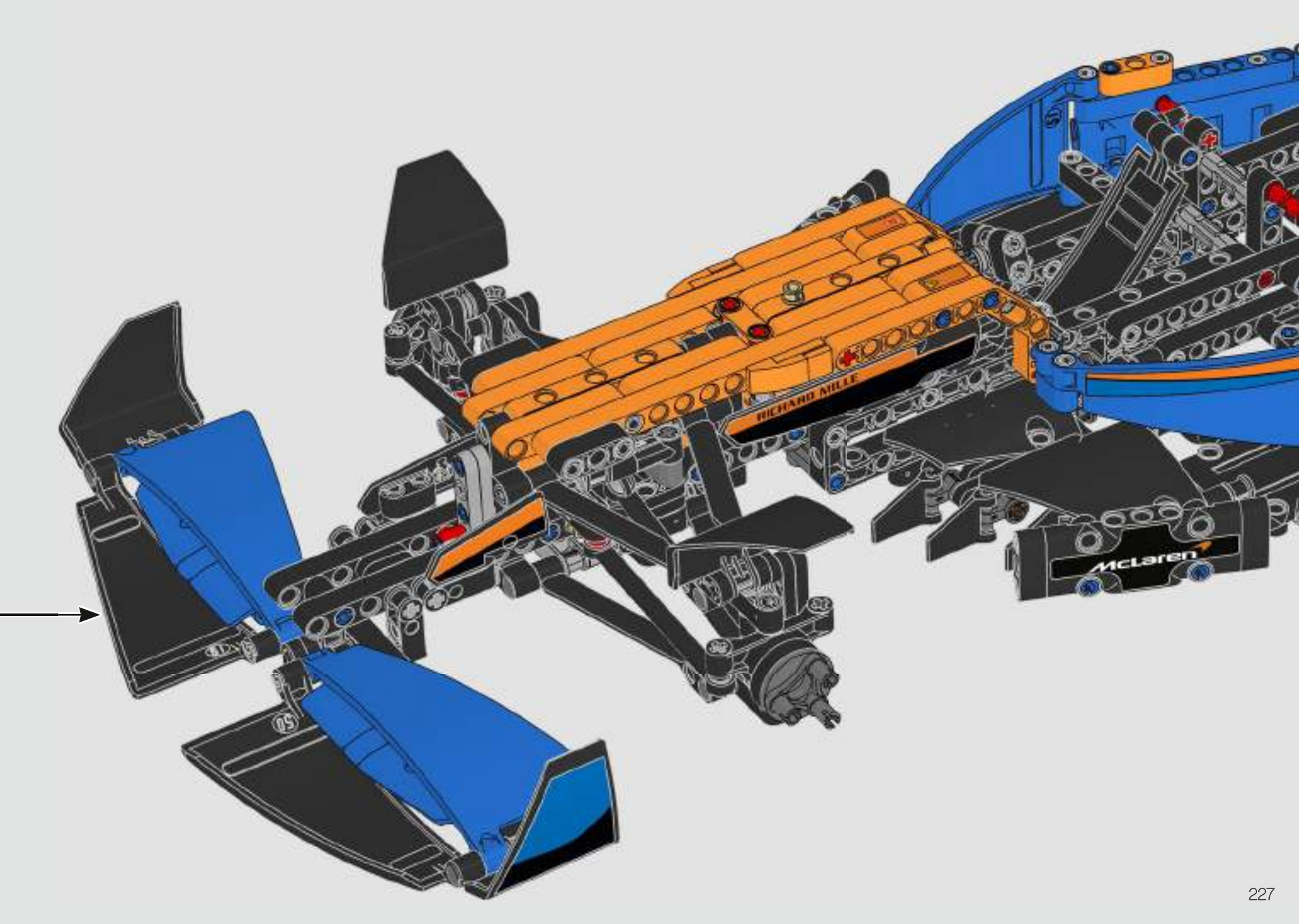
RICHARD MILLE
McLaren

232

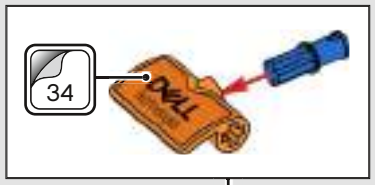

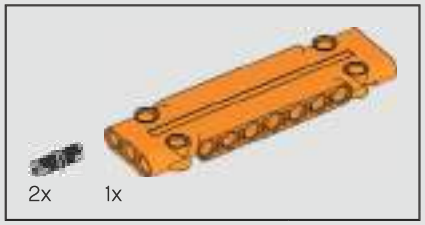

233

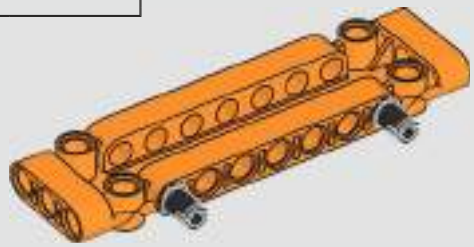

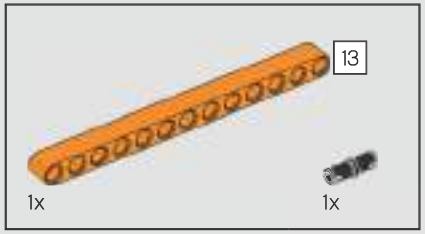

234

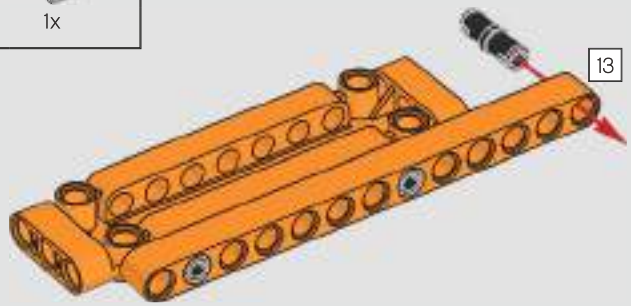

235

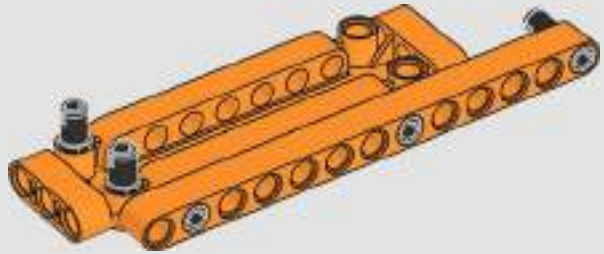

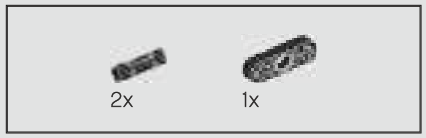

236

237

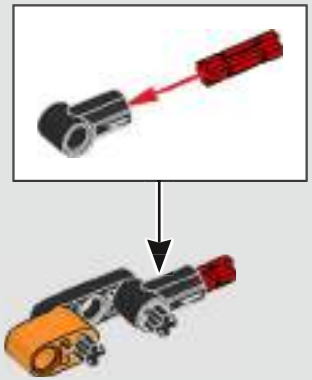

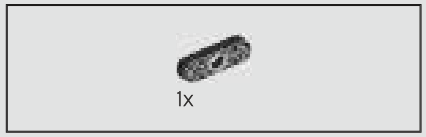

238

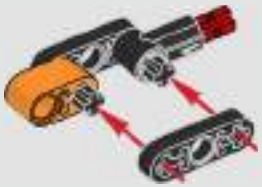

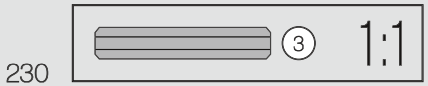

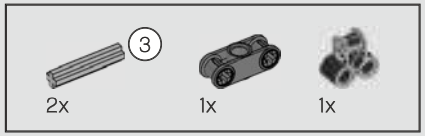

239

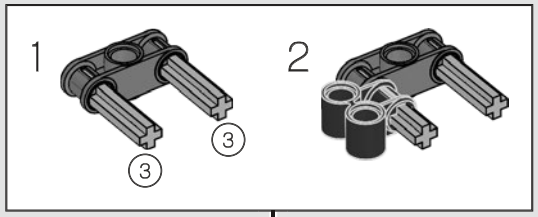

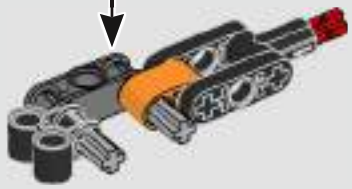

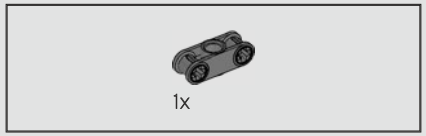

240

241

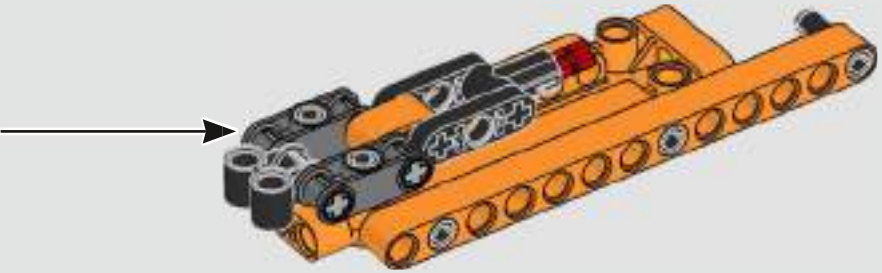

242

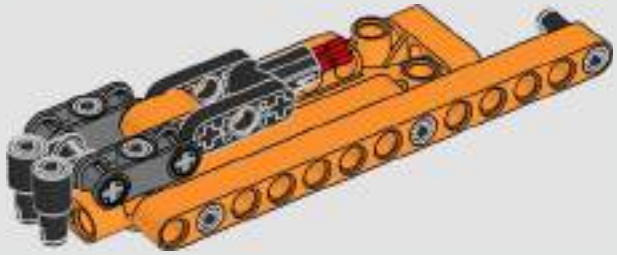

243

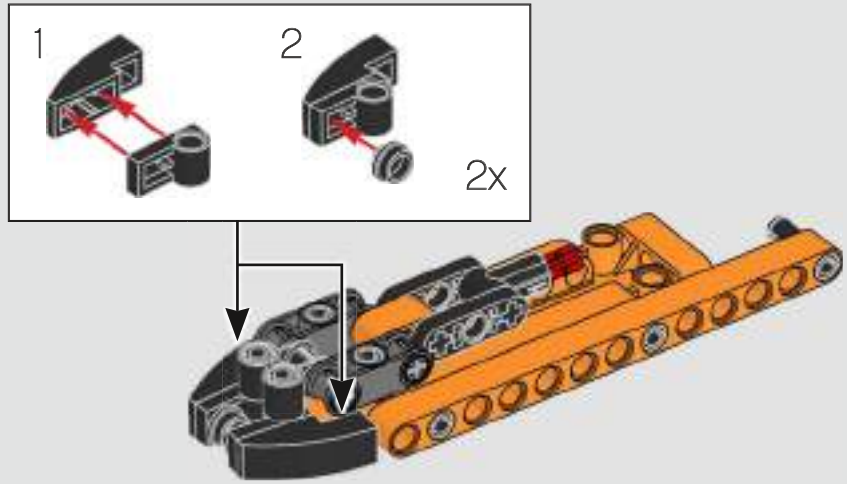

244

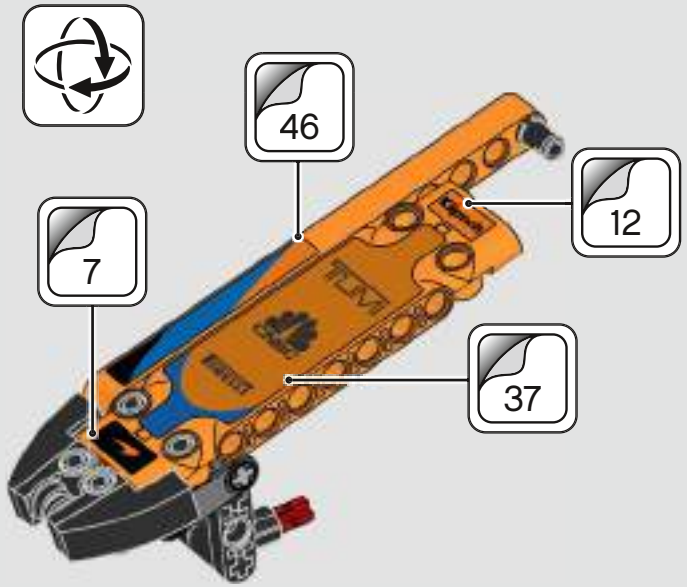

245

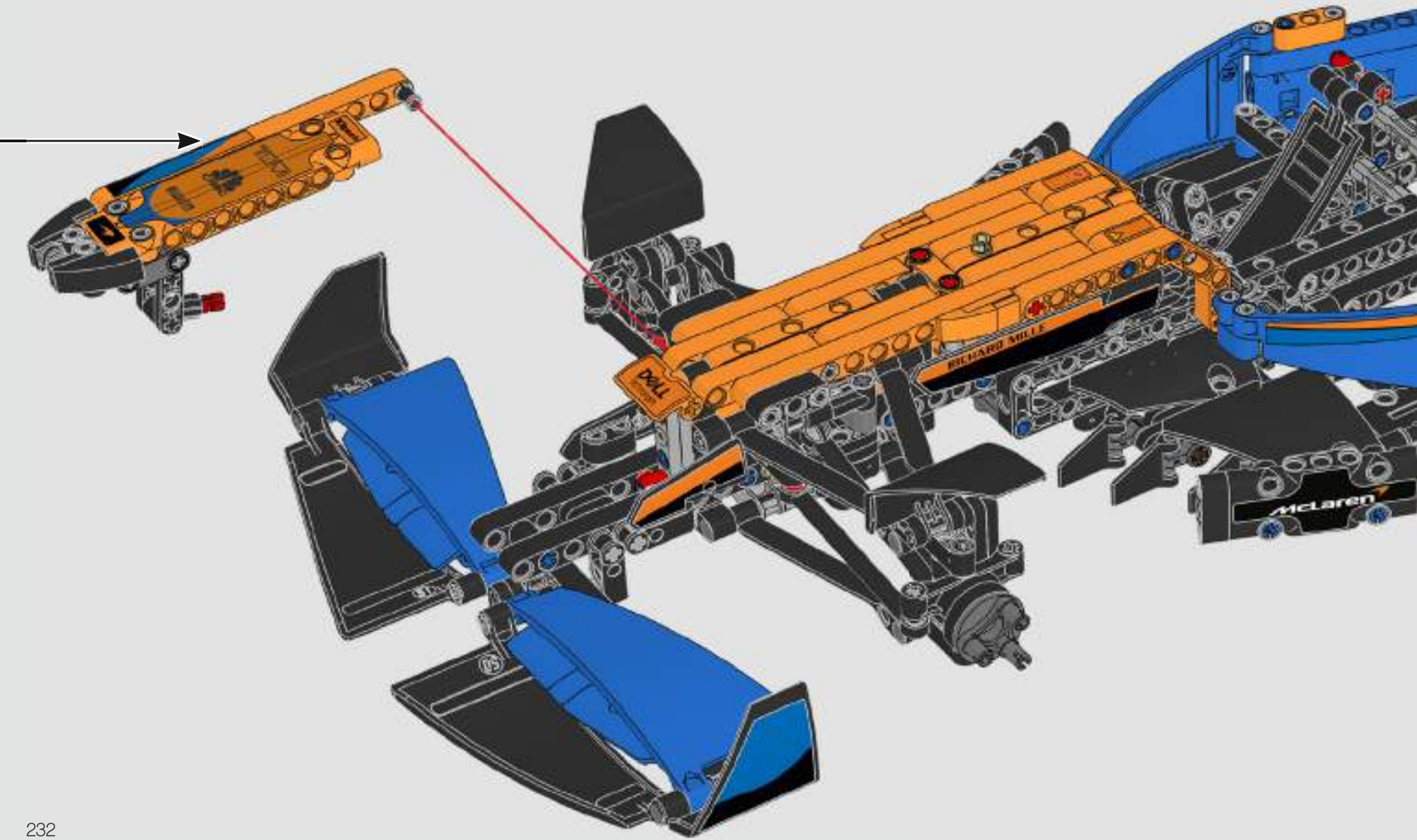

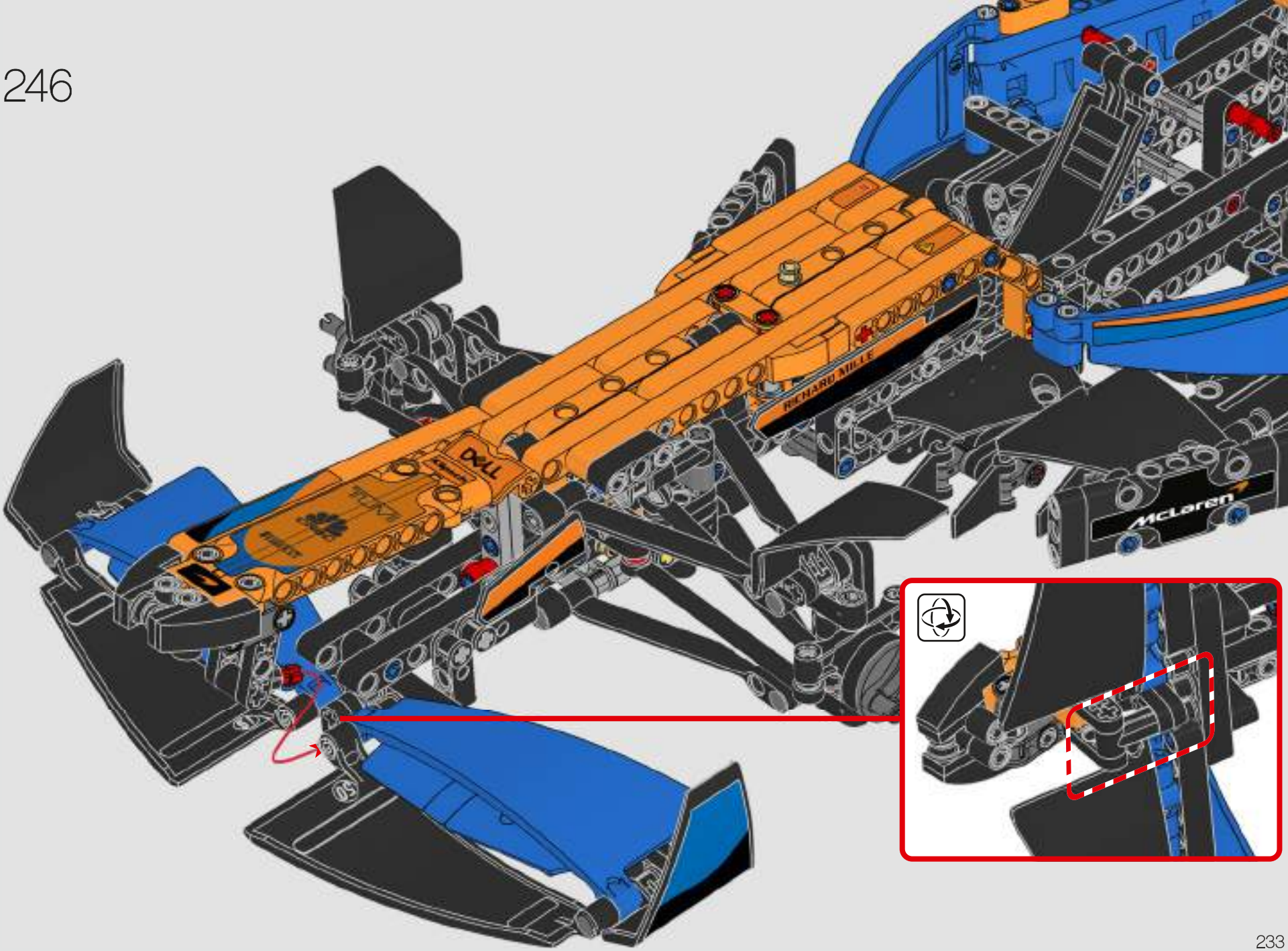
RICHARD MILLE
McLaren

247

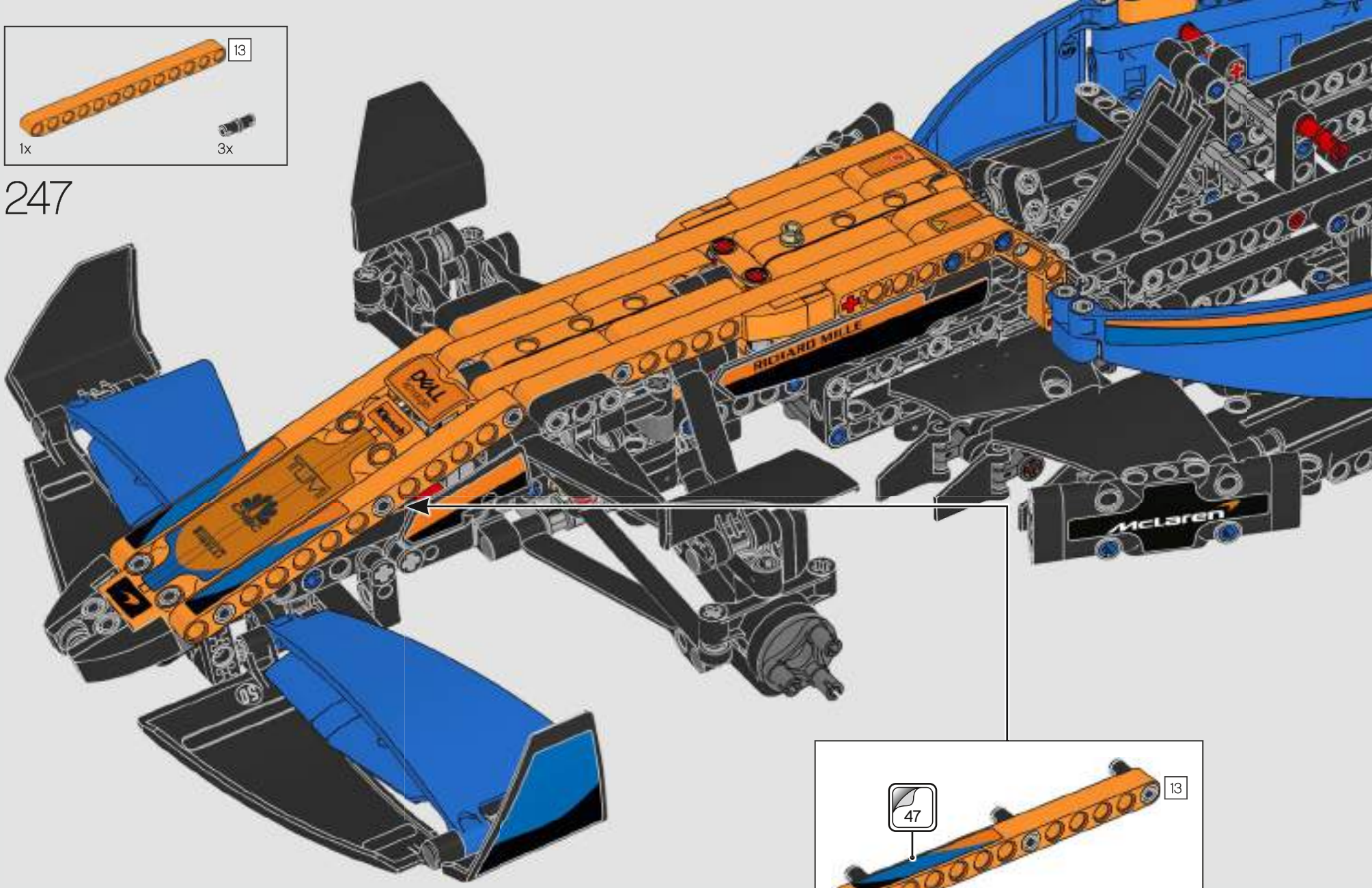

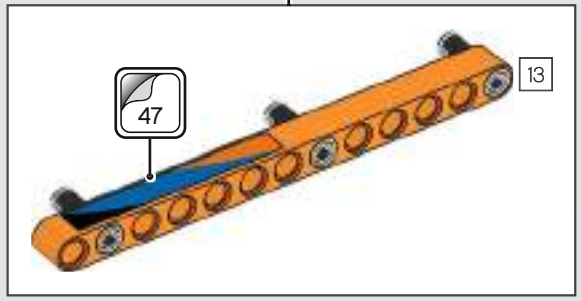

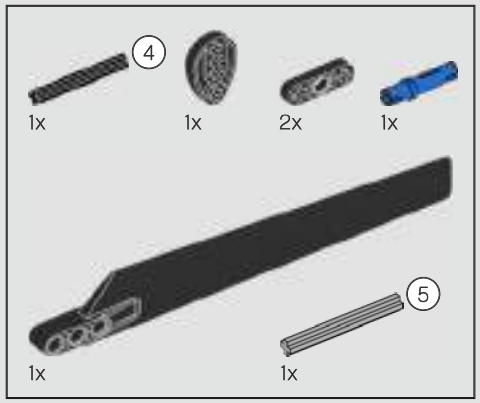

248

1

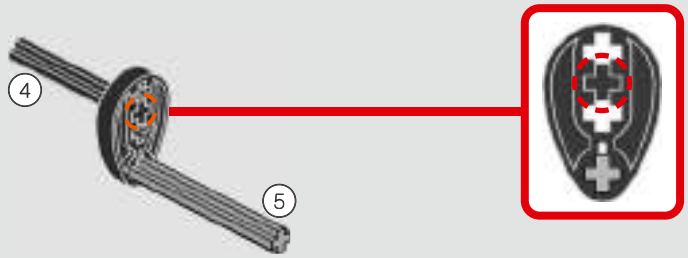

2

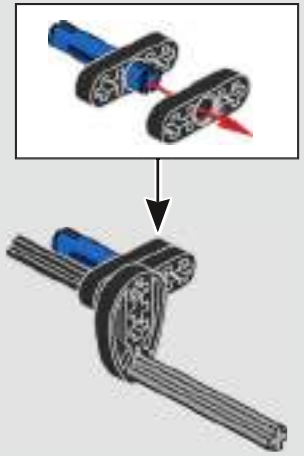

3

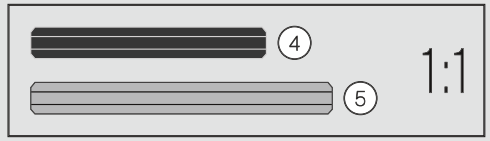

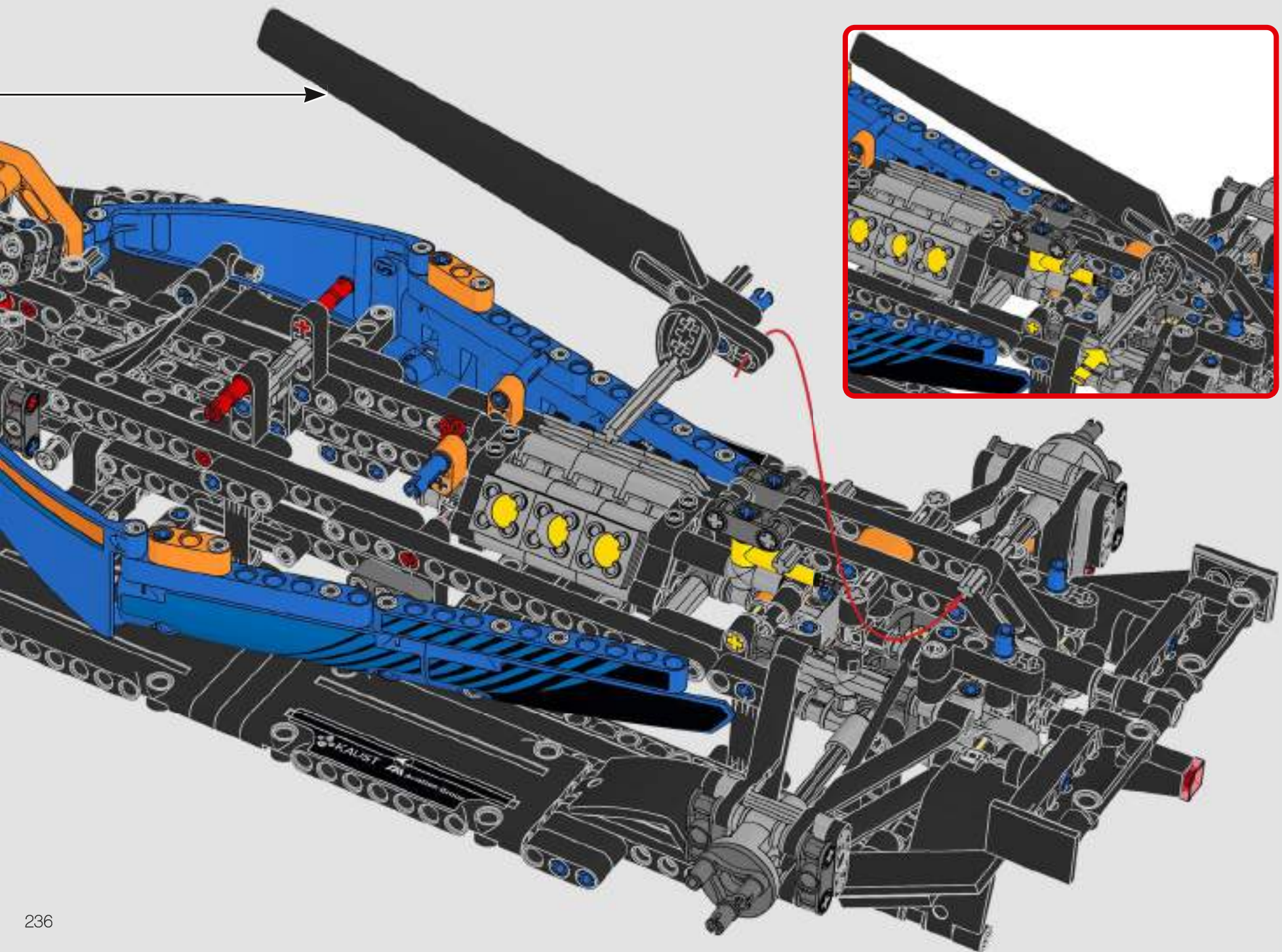
KAUST

249

250

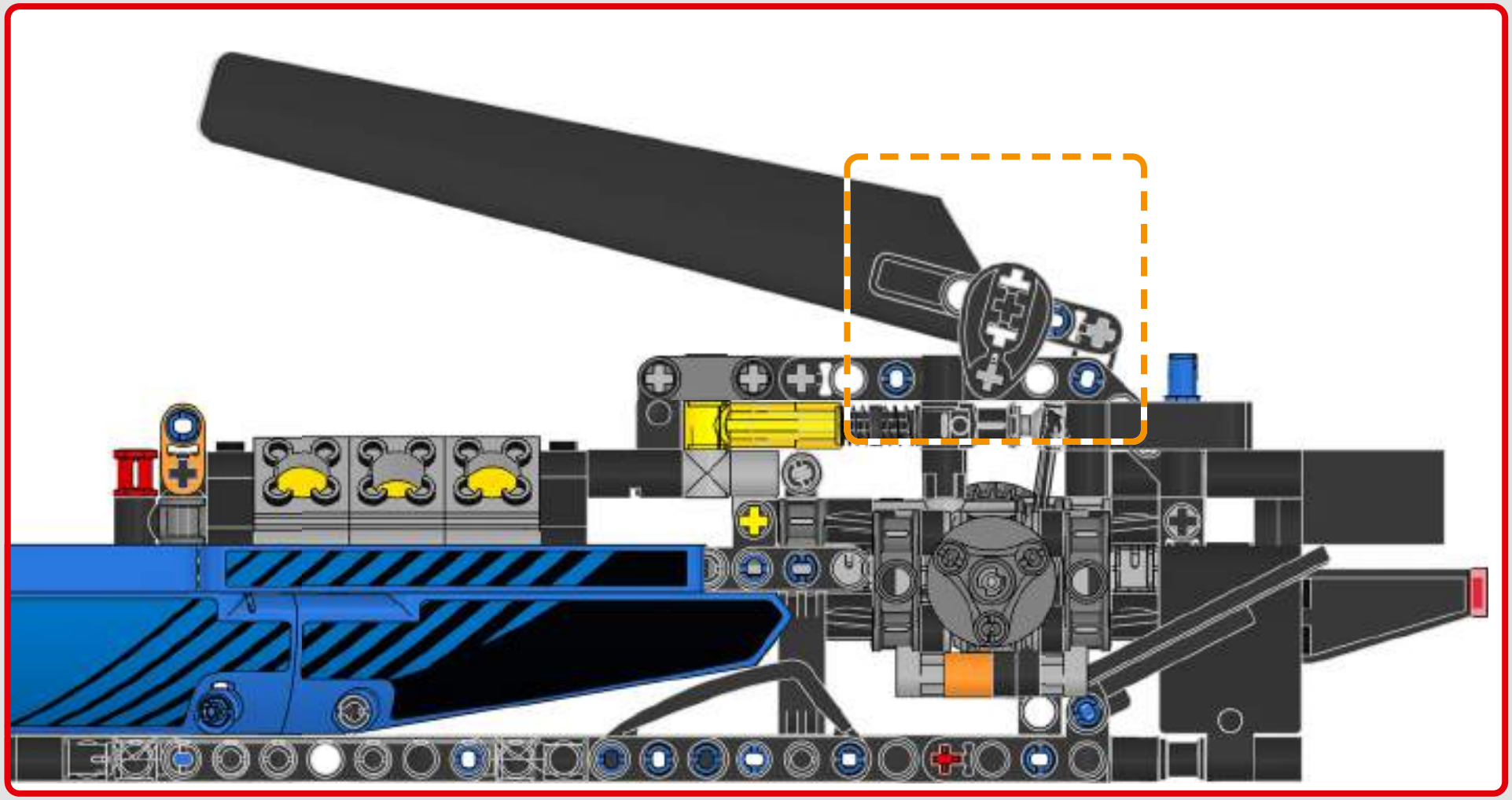

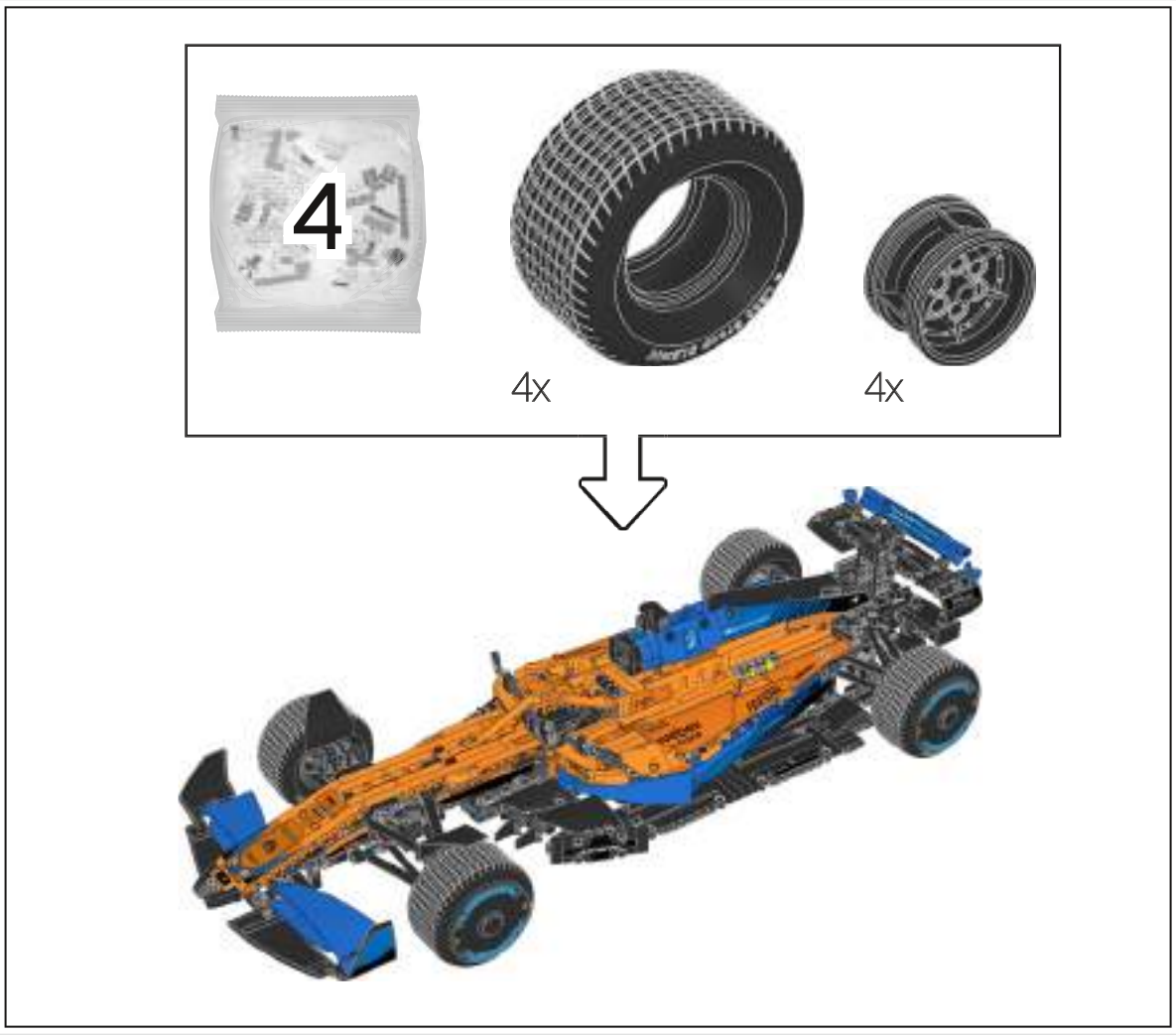
4
4x
4x

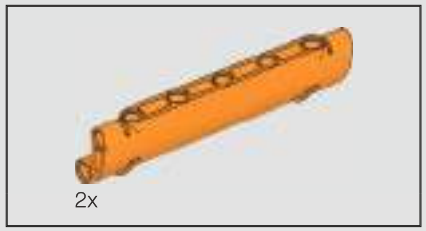

251

252

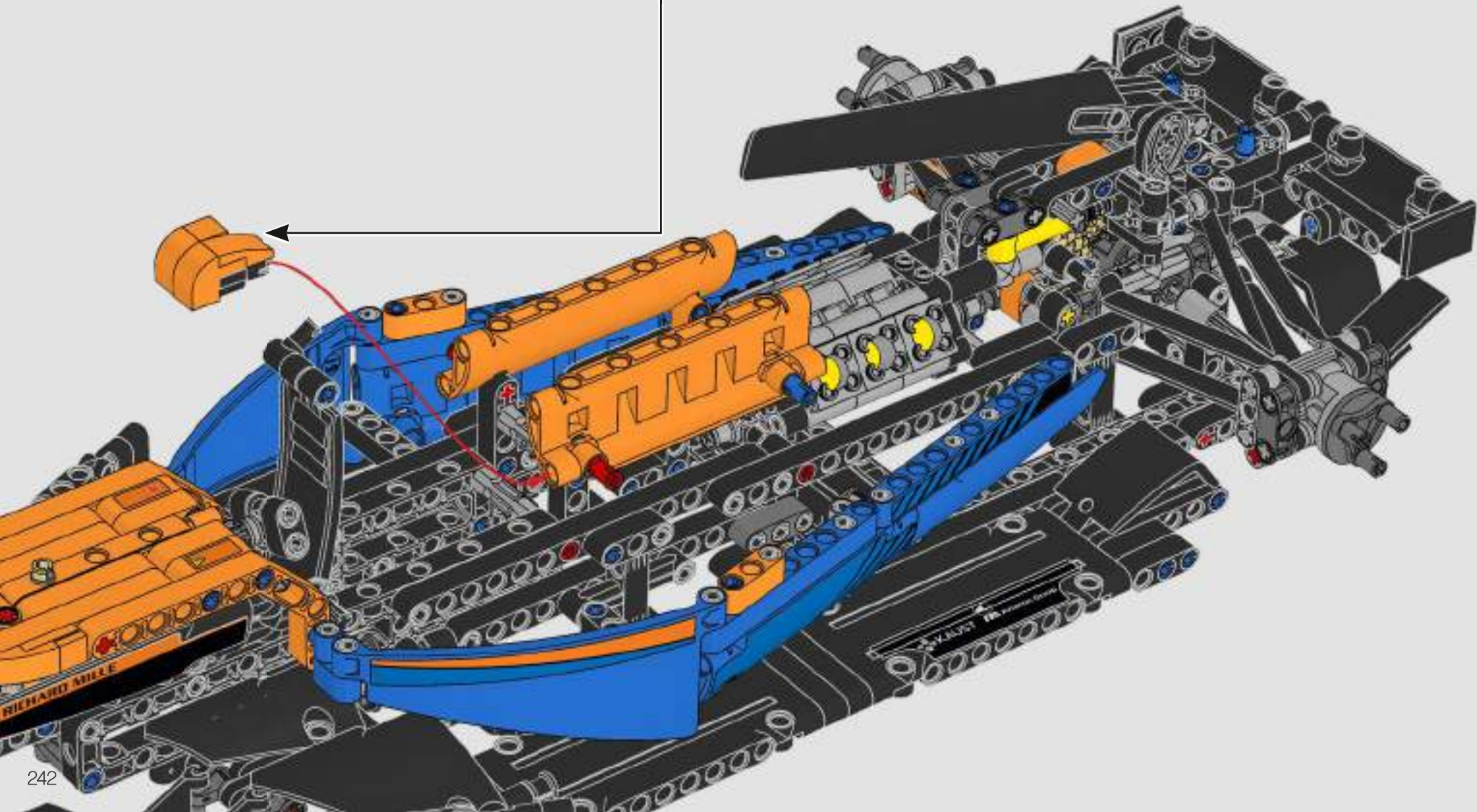

253

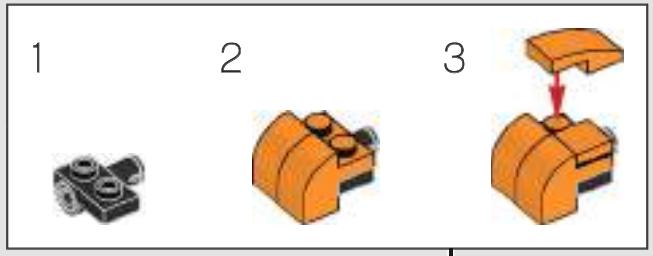

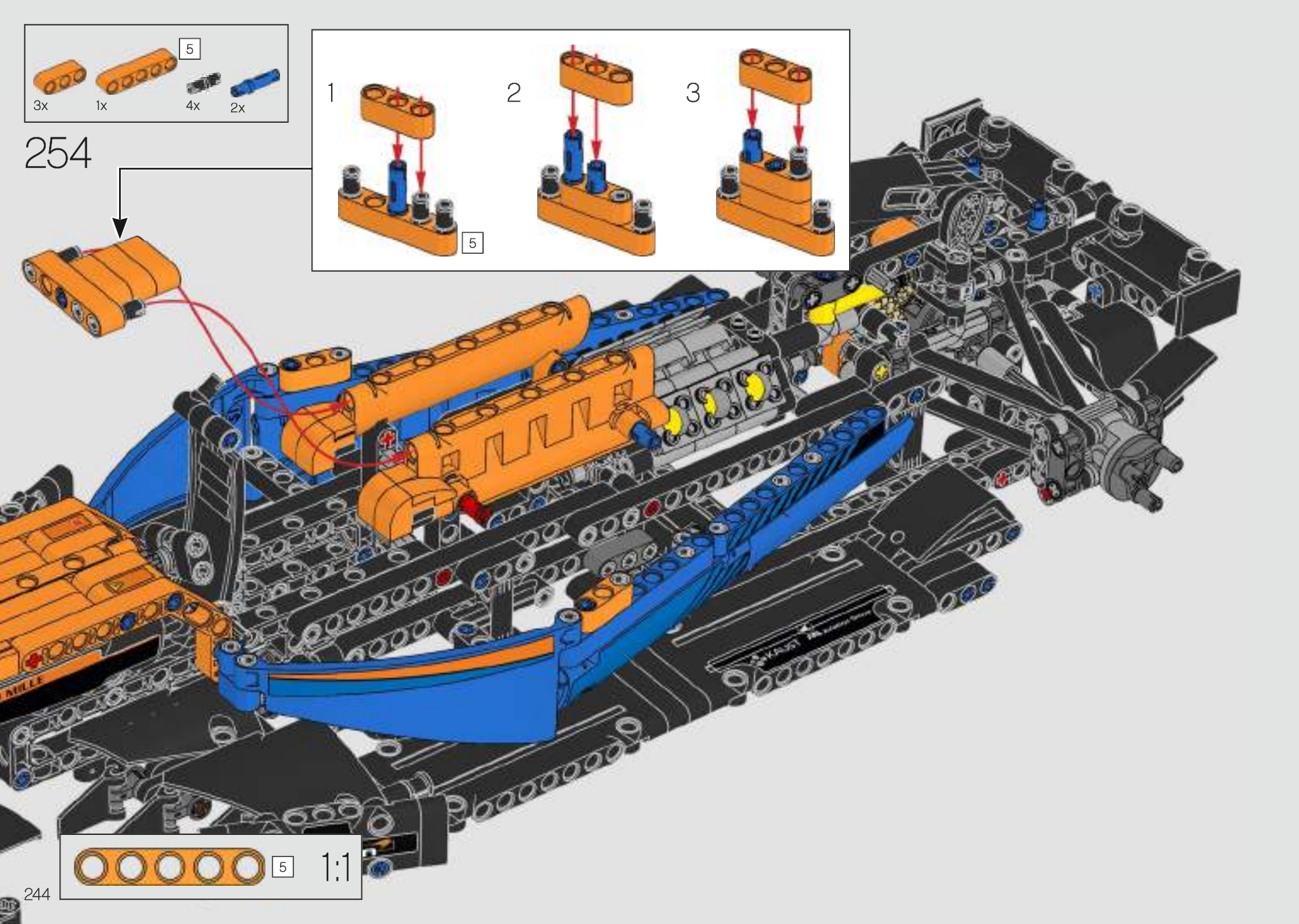
5
3x
1x
4x
2x
254
1
2
3
5
5
1:1

255

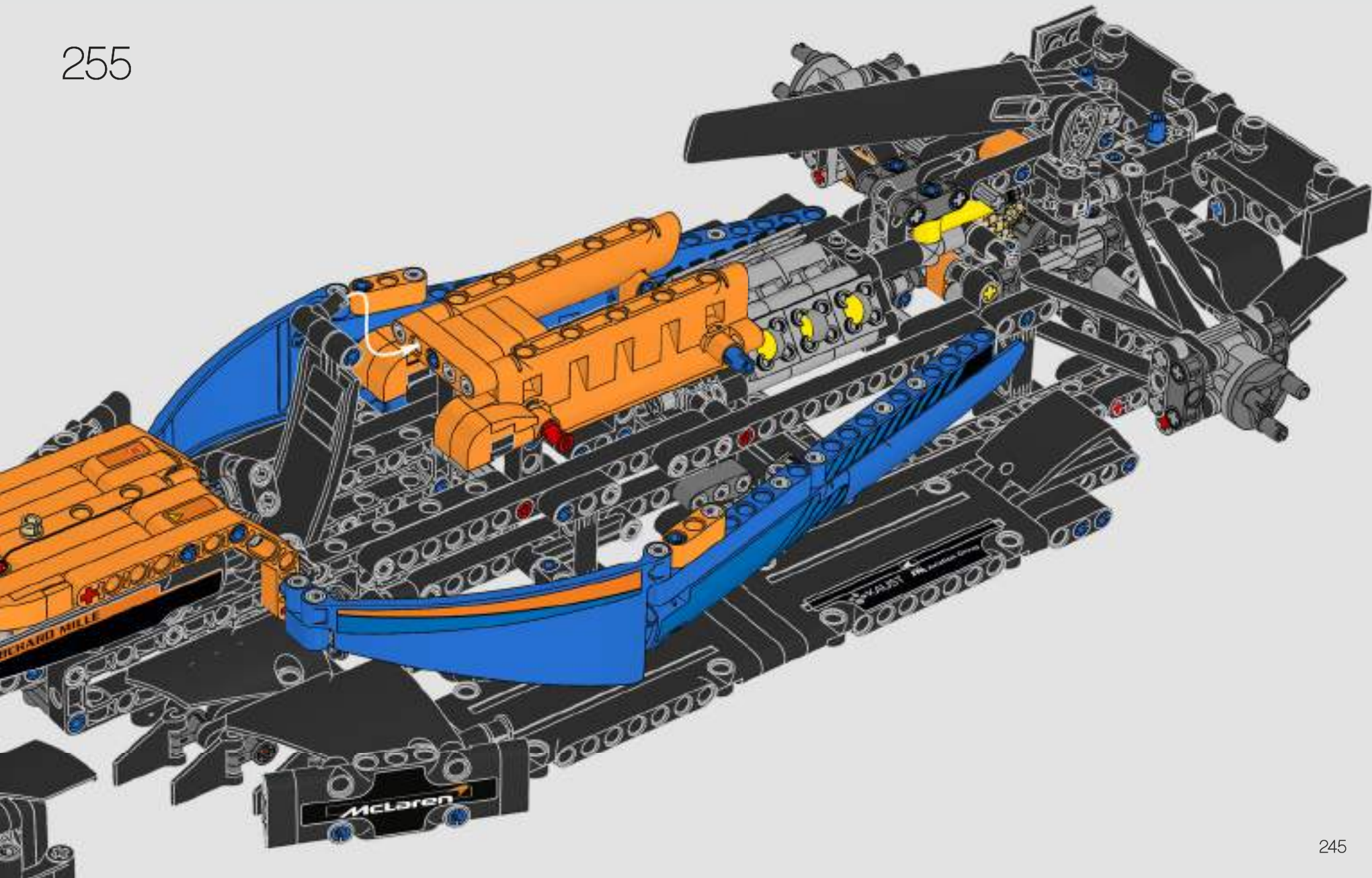

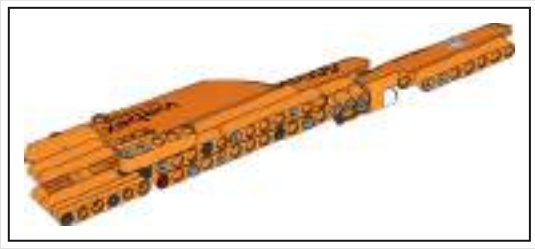

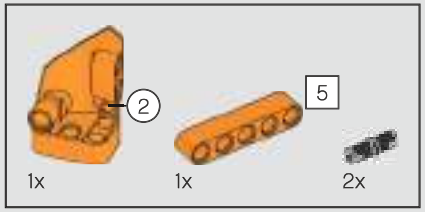

256

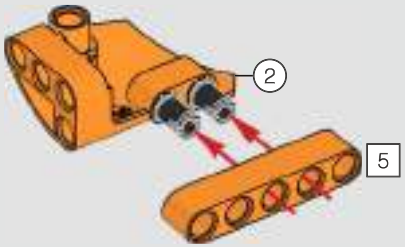

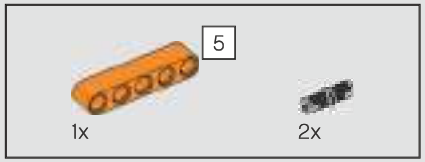

257

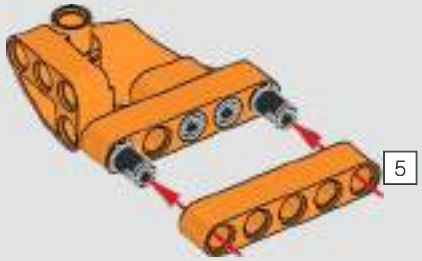

258

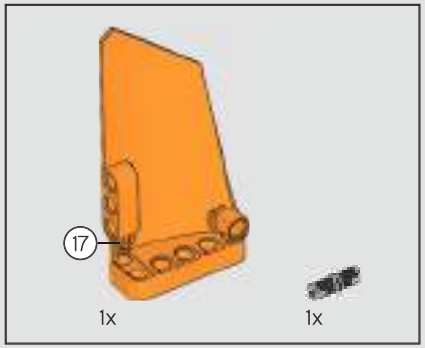

259

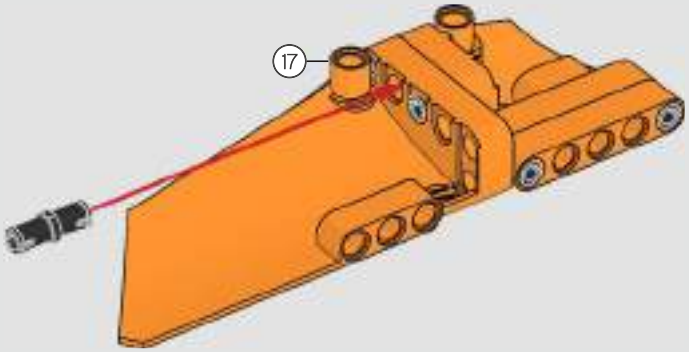

260

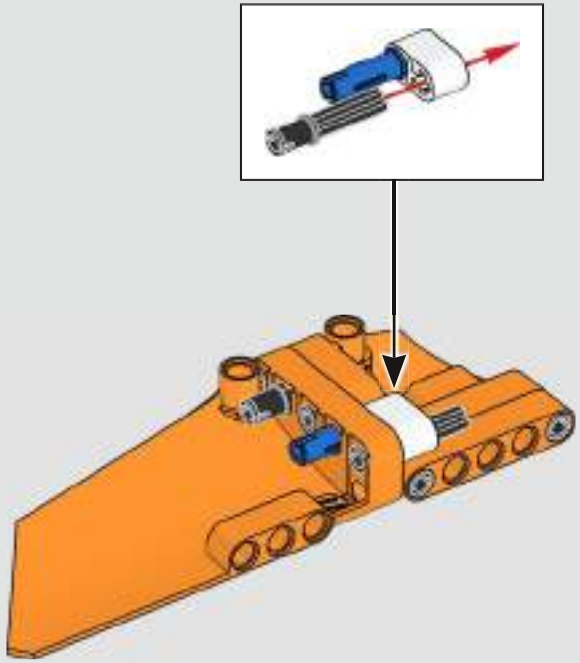

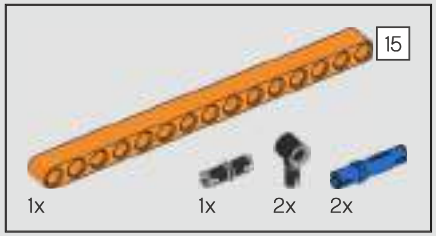

261

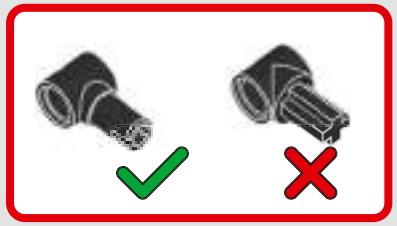

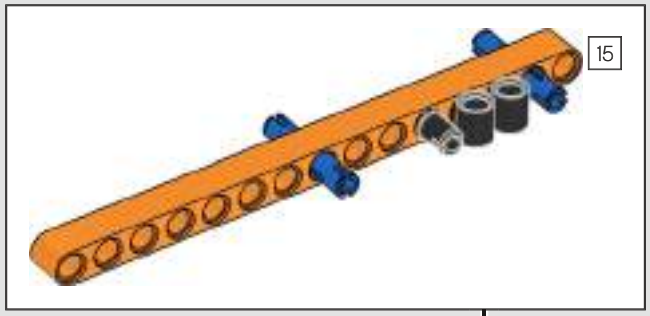

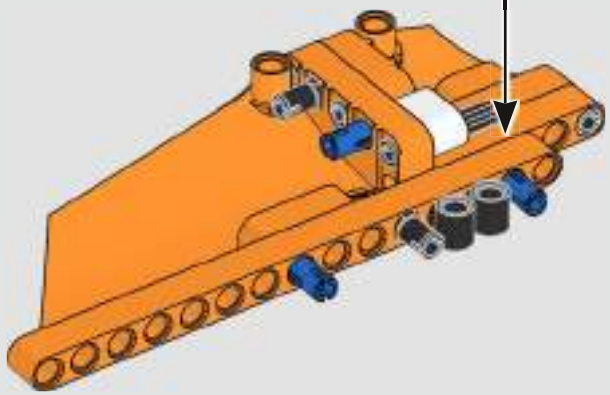

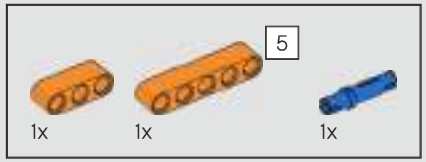

262

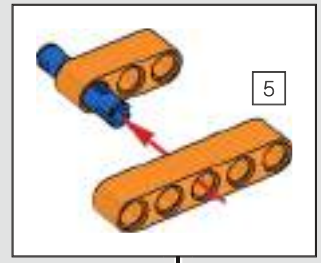

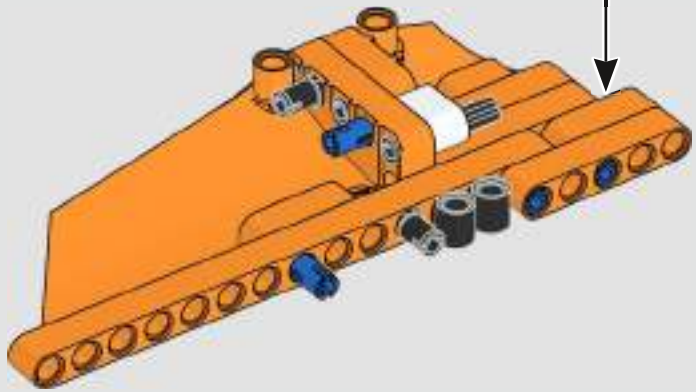

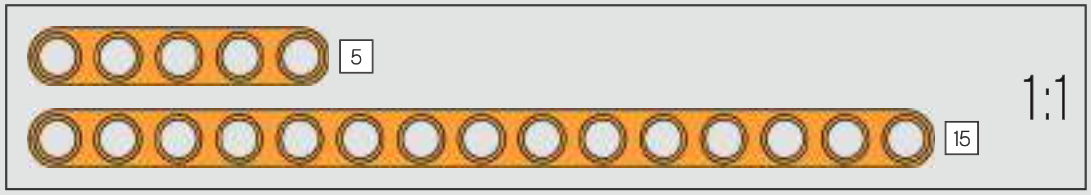

263

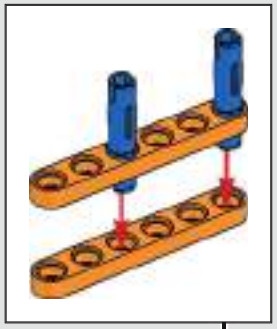

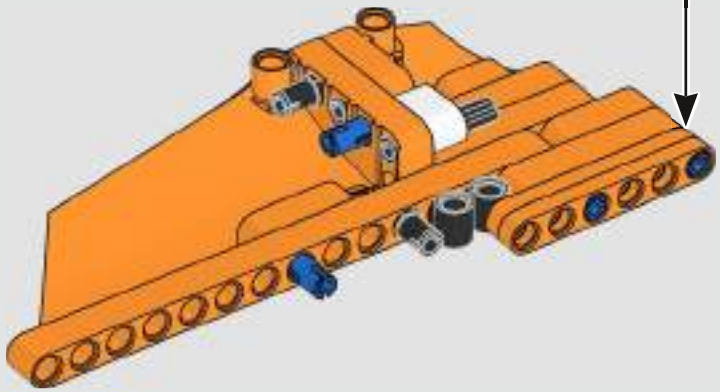

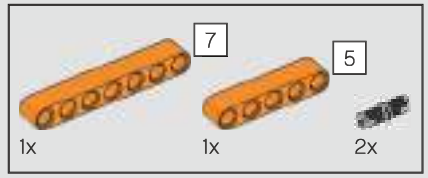

264

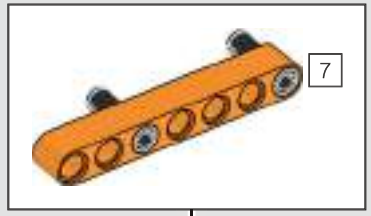

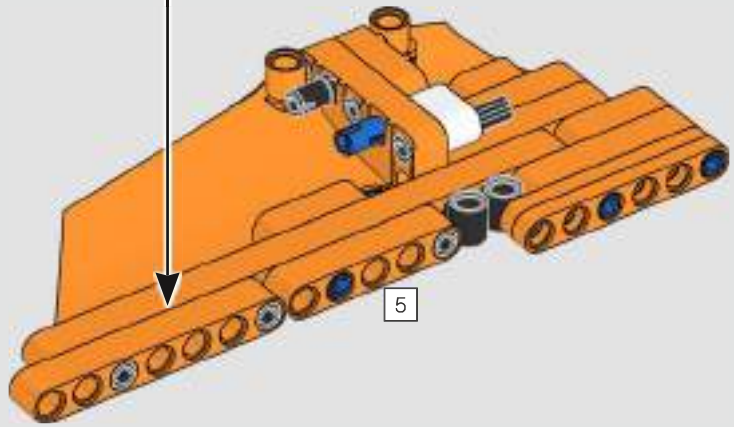

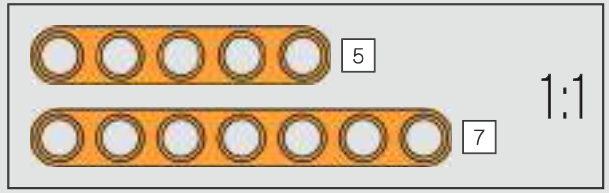

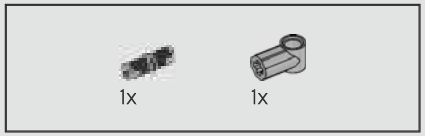

265

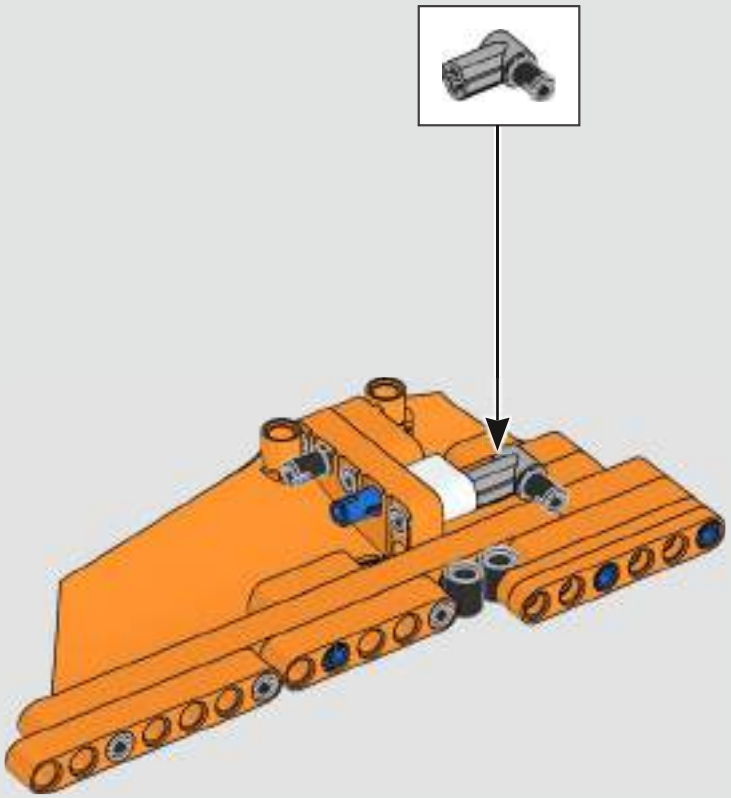

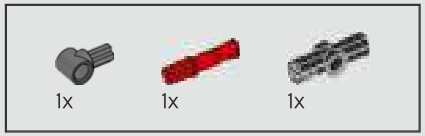

266

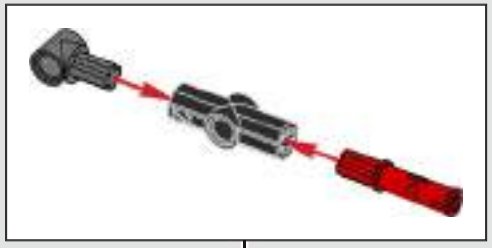

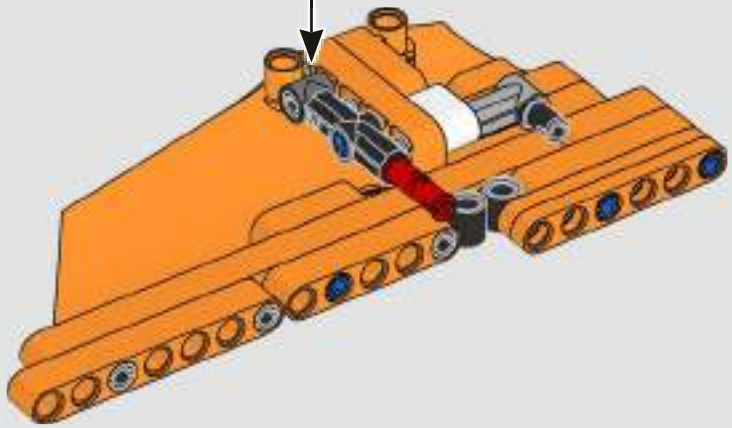

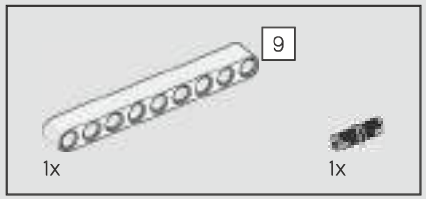

267

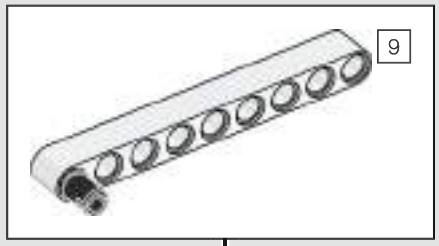

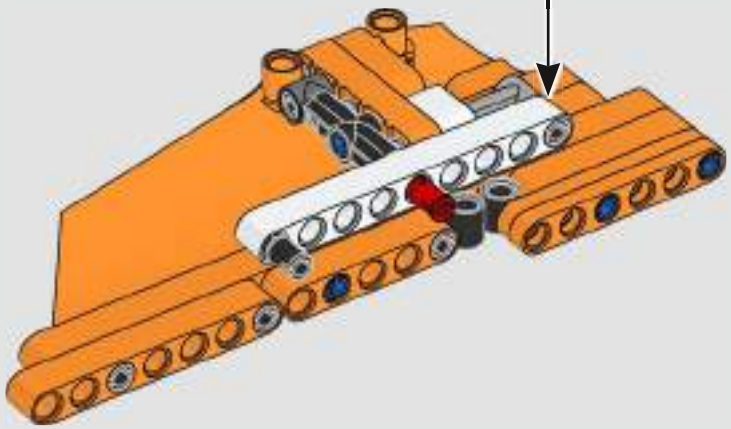

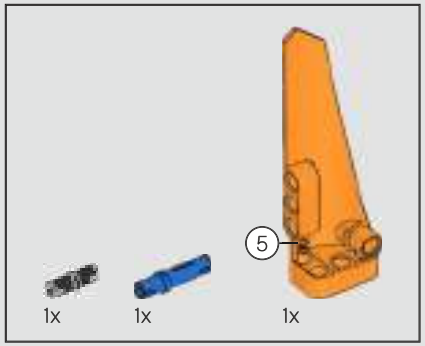

268

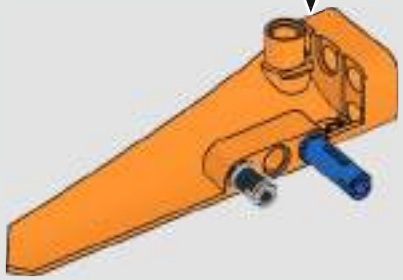

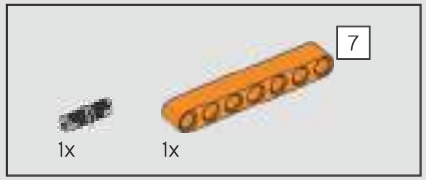

269

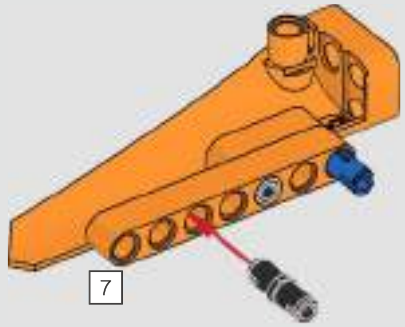

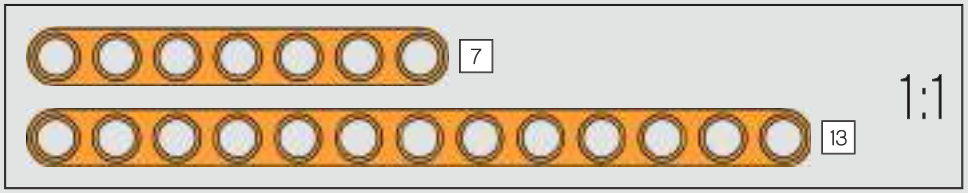

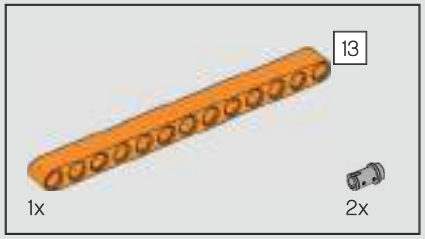

270

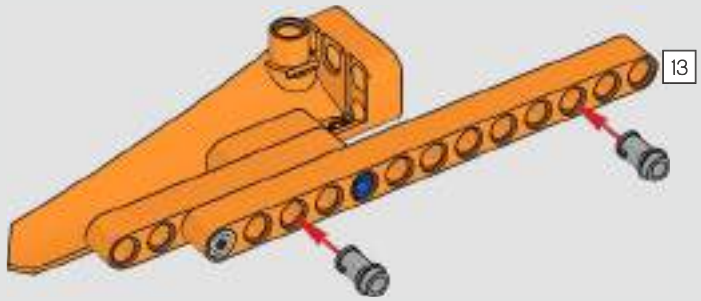

271

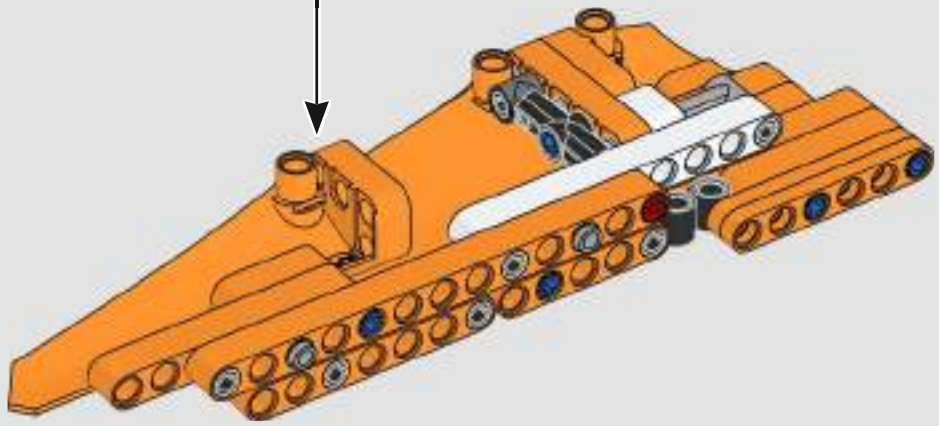

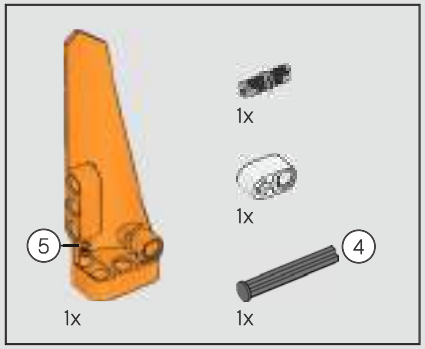

272

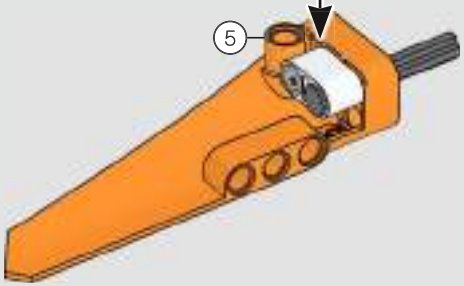

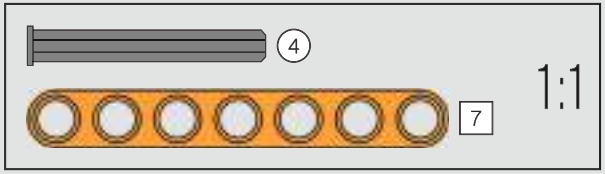

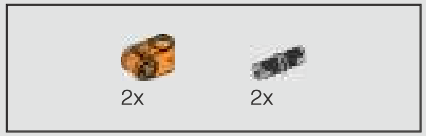

273

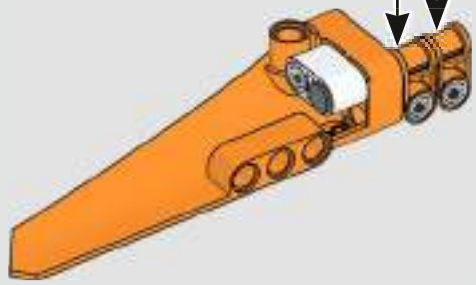

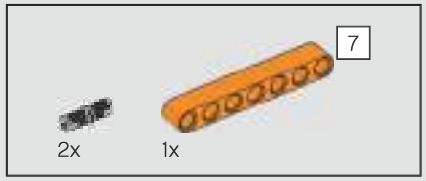

274

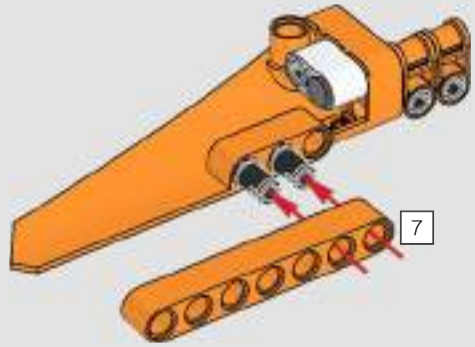

275

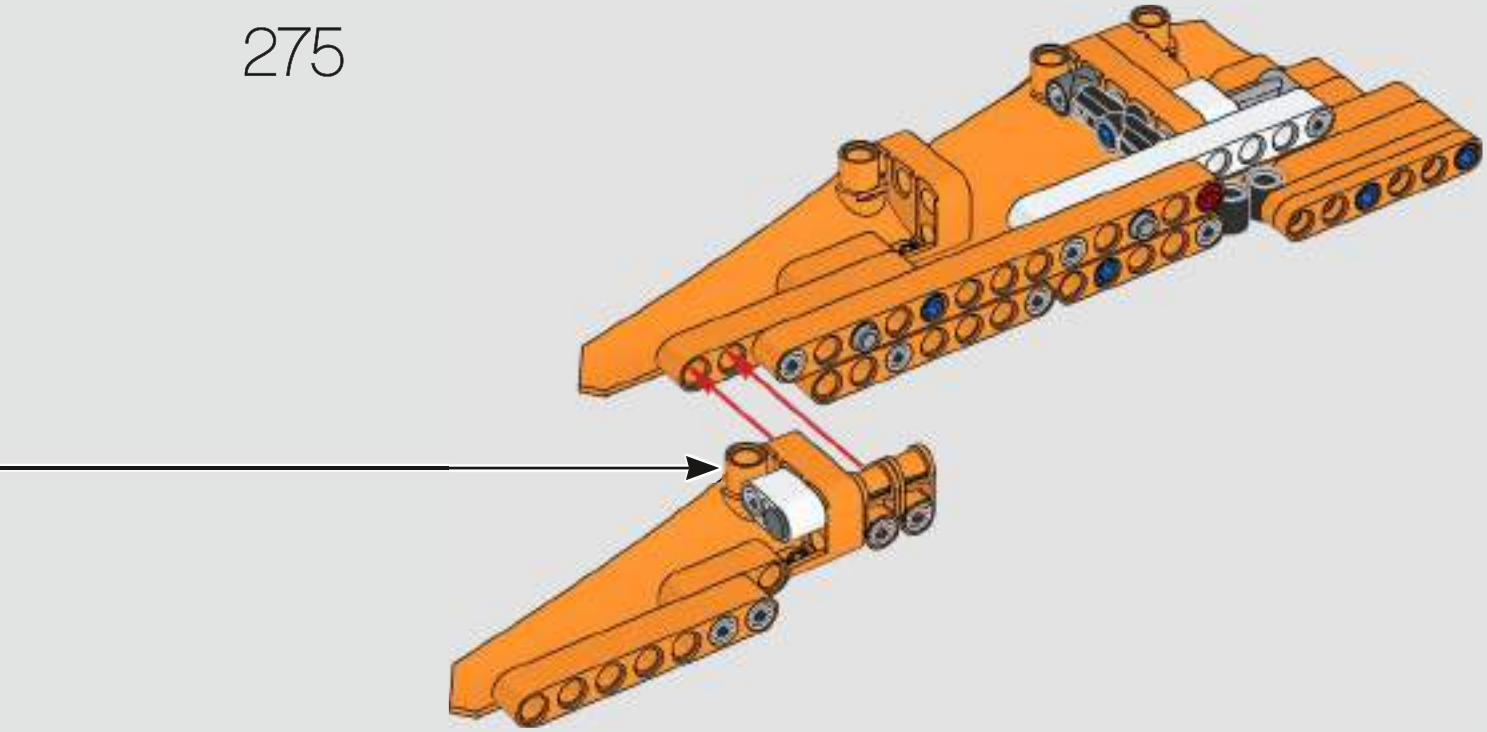

276

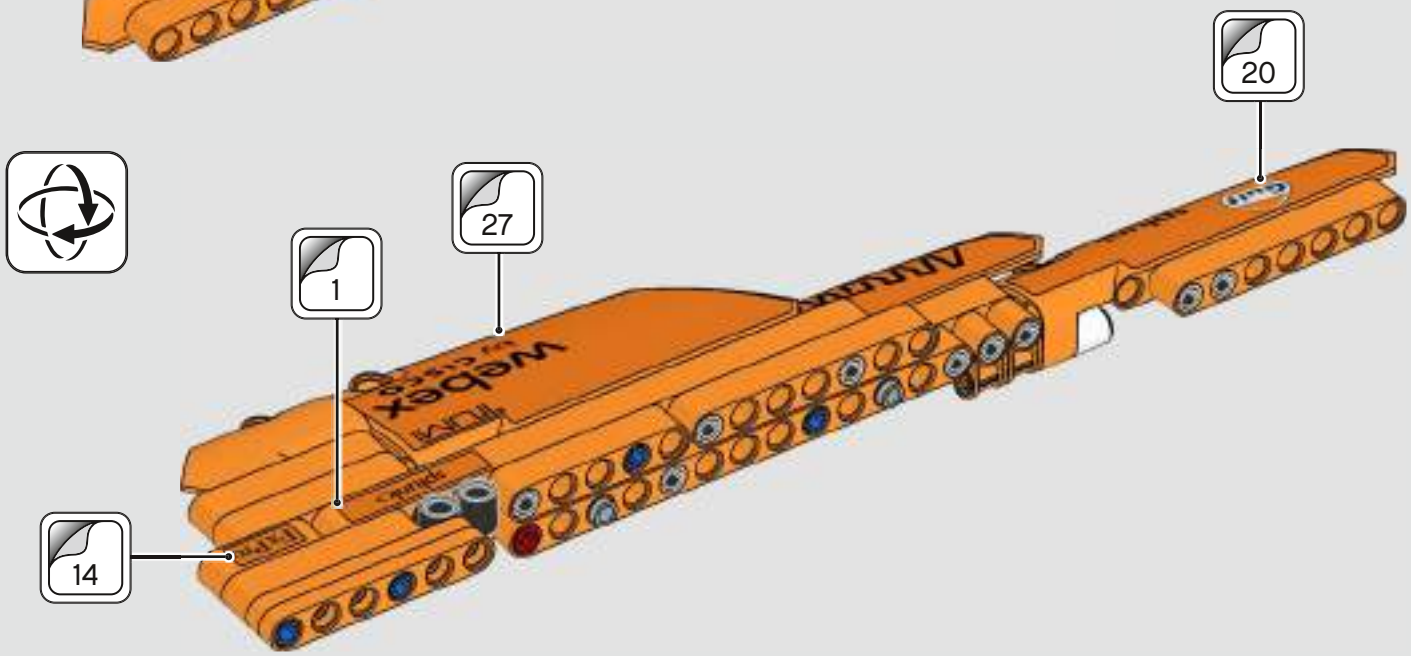

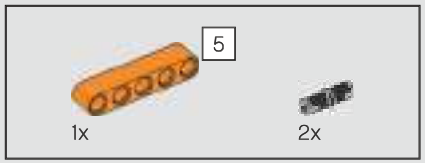

277

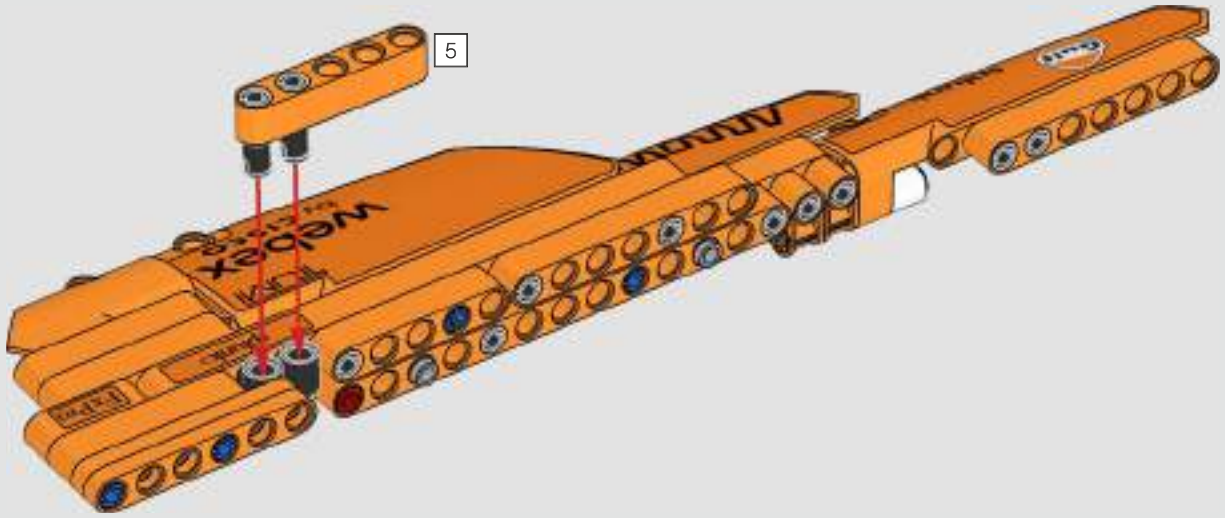

278

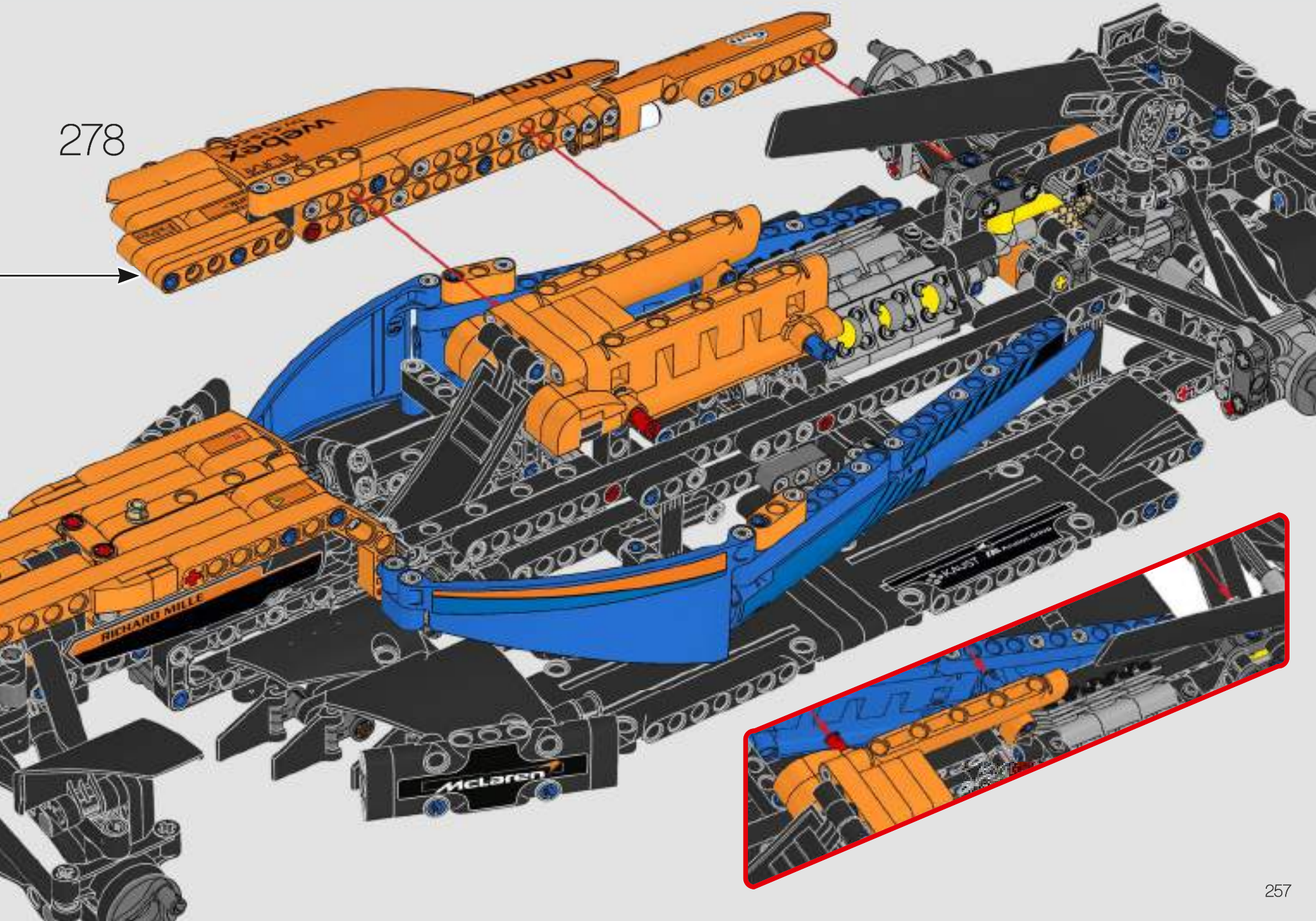

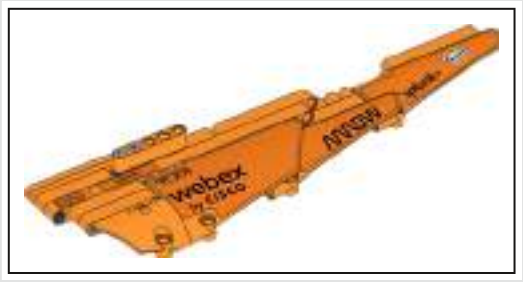

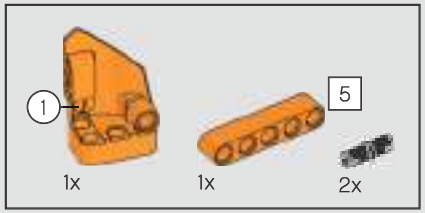

279

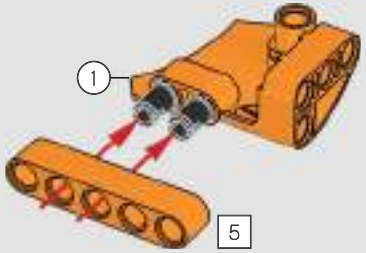

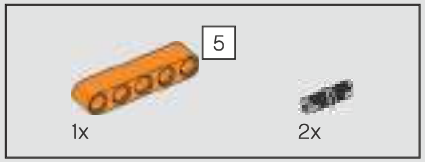

280

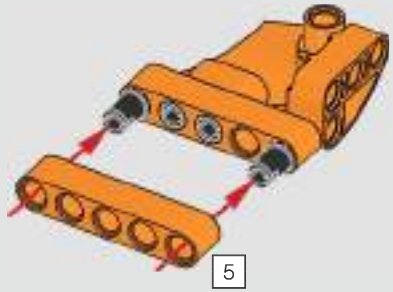

281

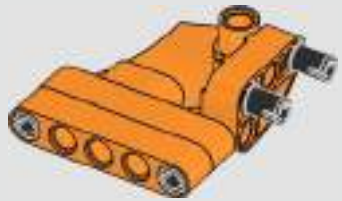

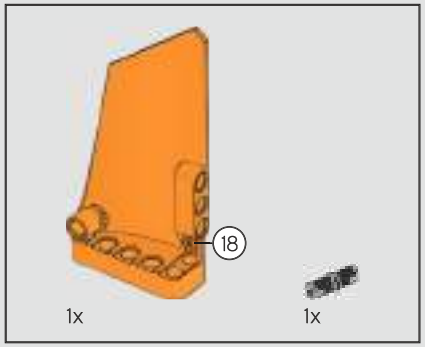

282

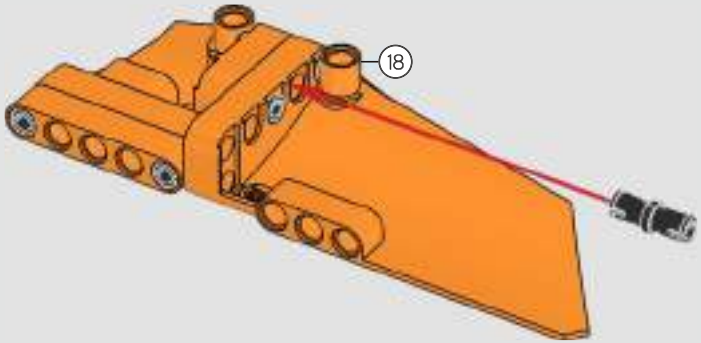

283

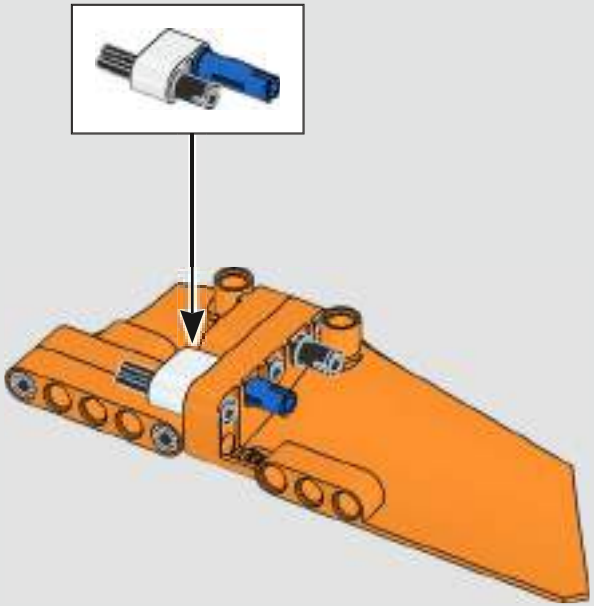

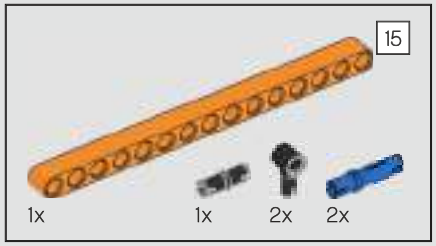

284

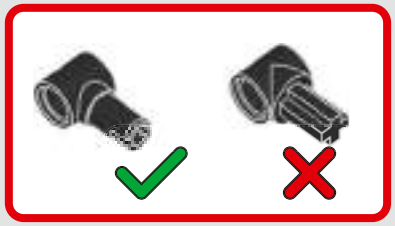

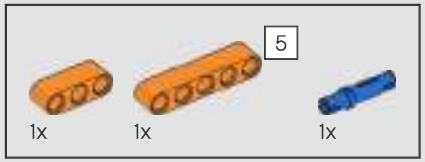

285

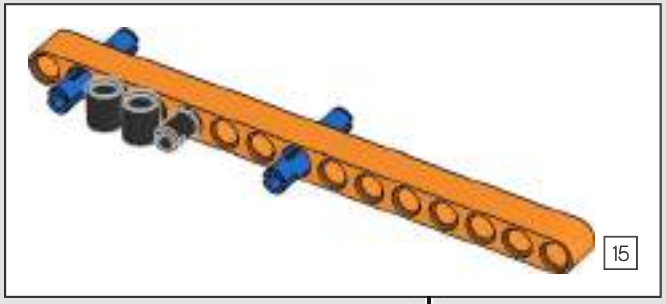

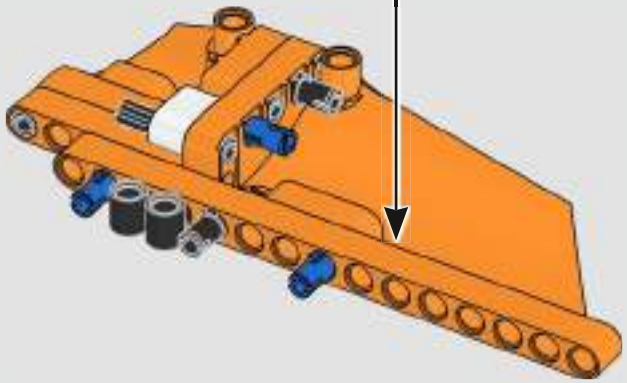

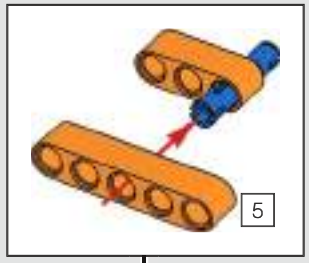

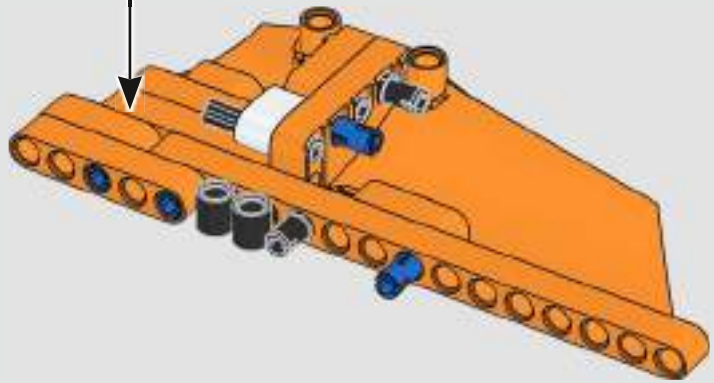

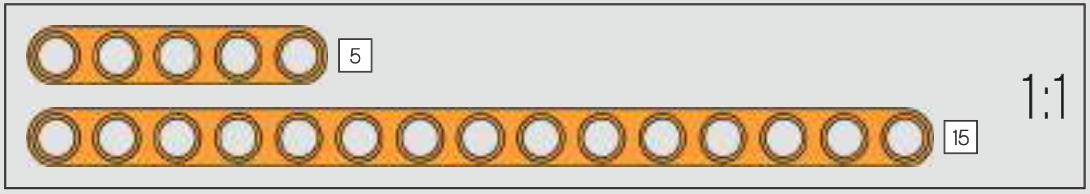

286

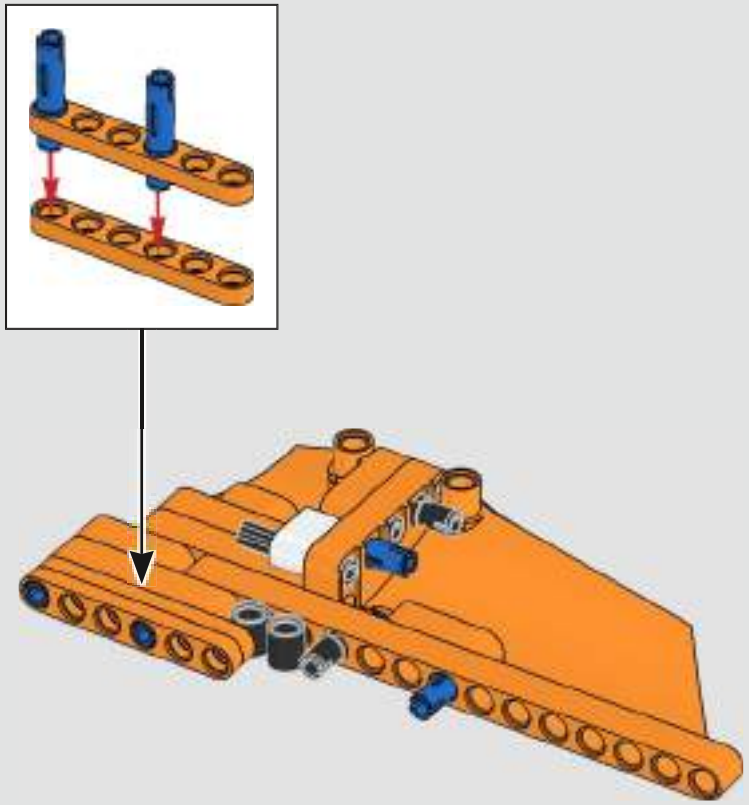

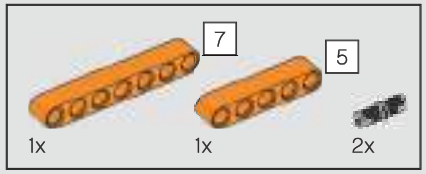

287

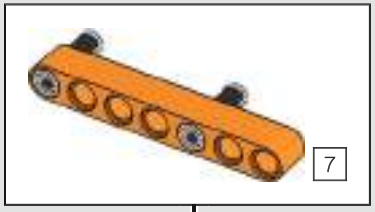

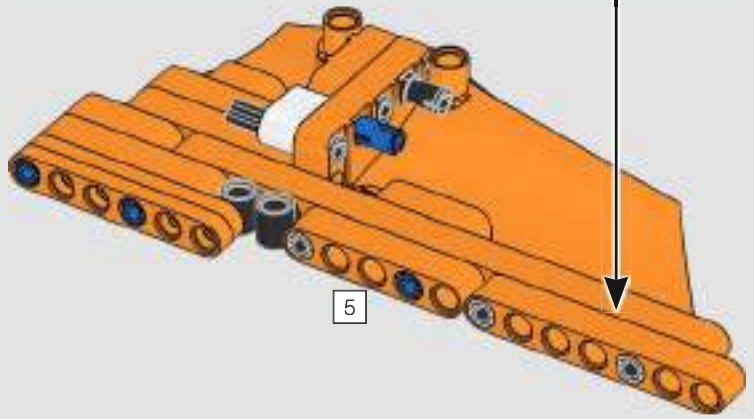

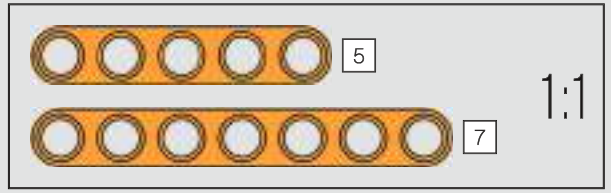

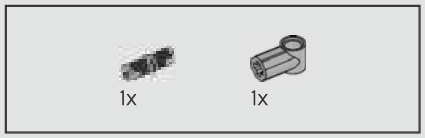

288

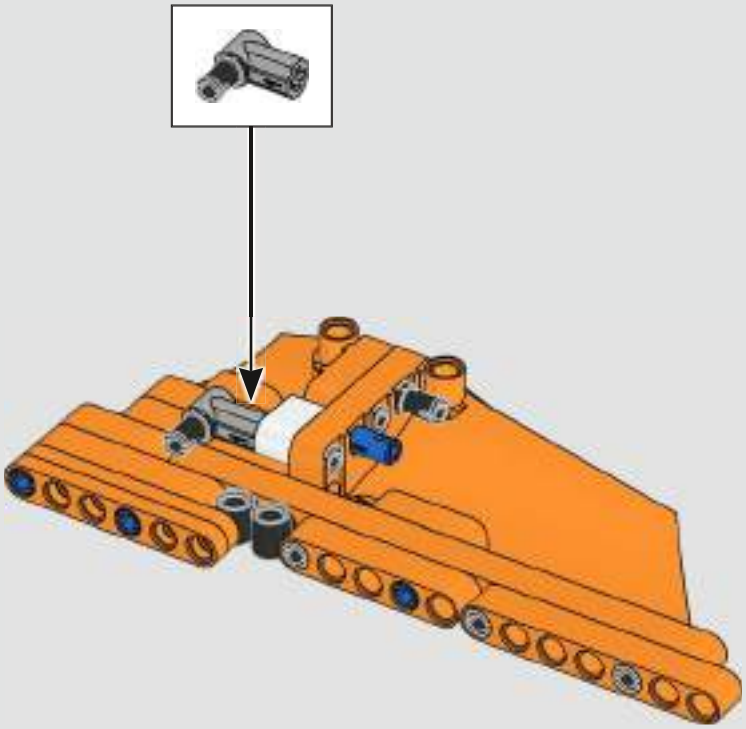

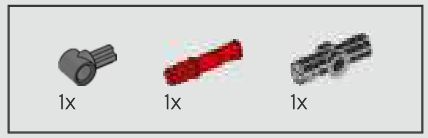

289

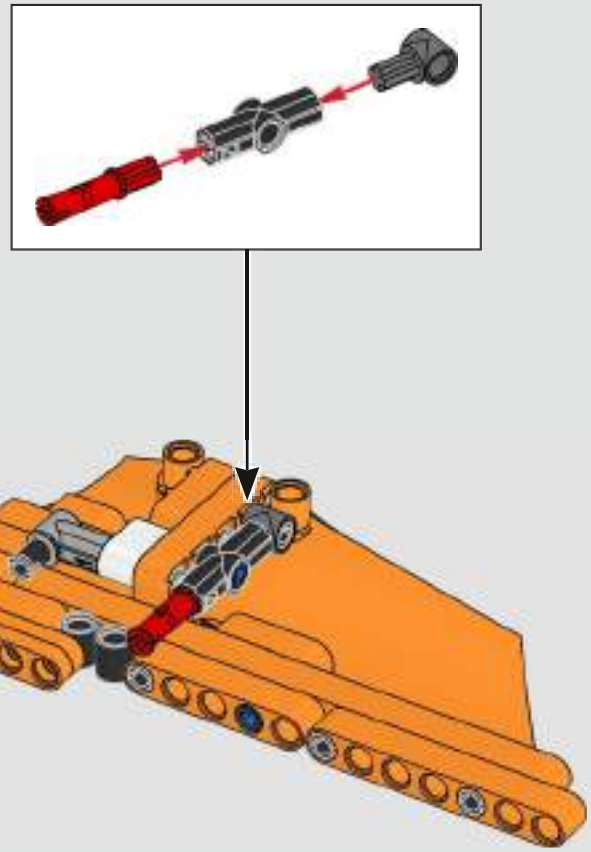

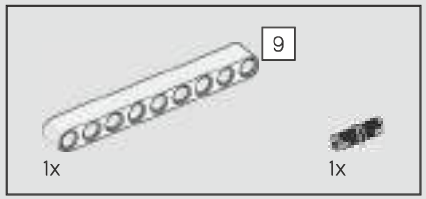

290

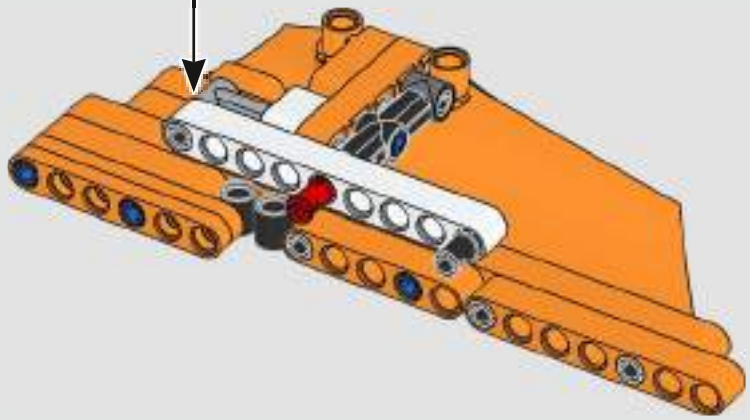

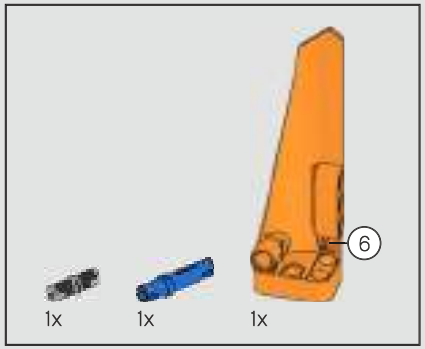

291

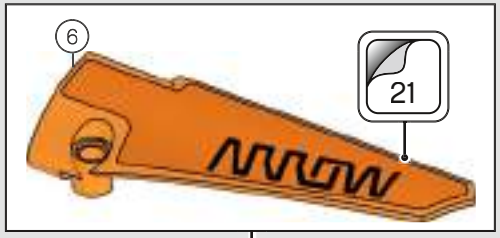

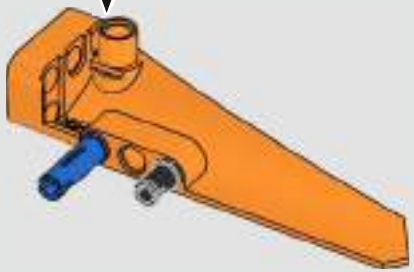

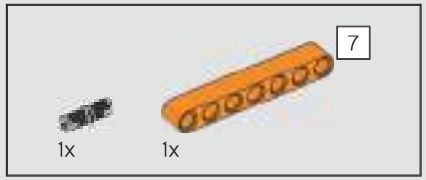

292

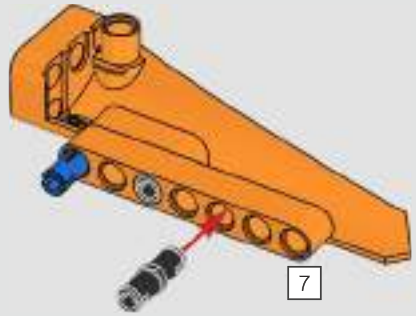

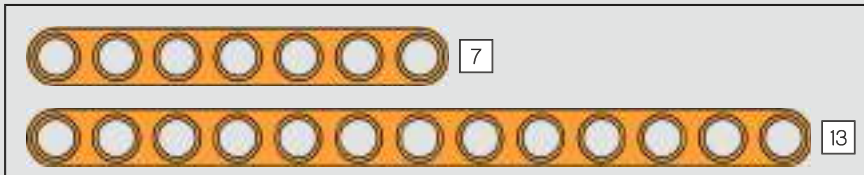

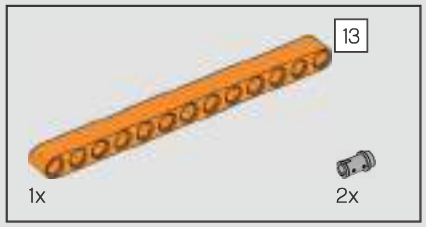

293

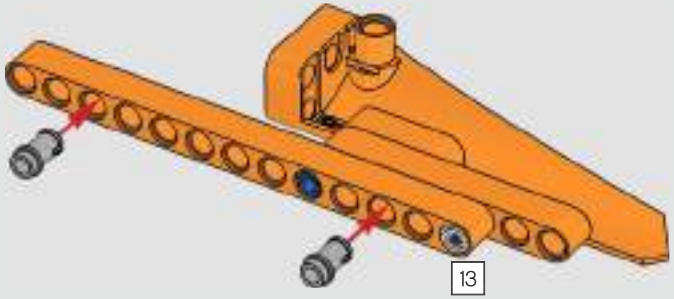

294

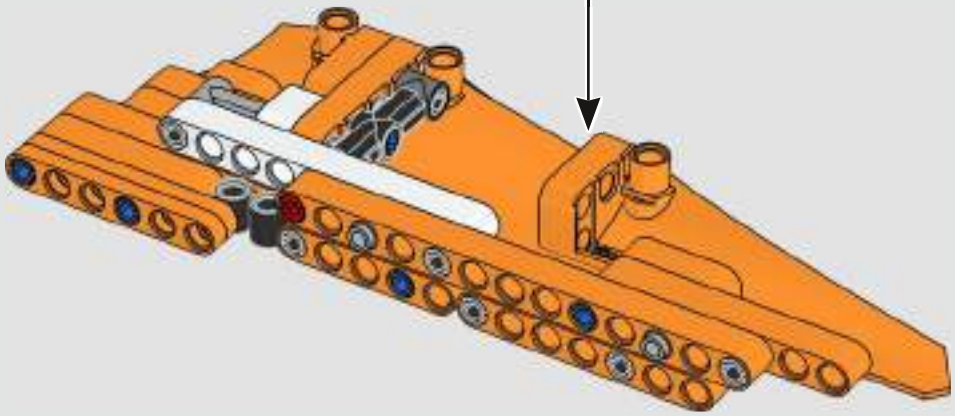

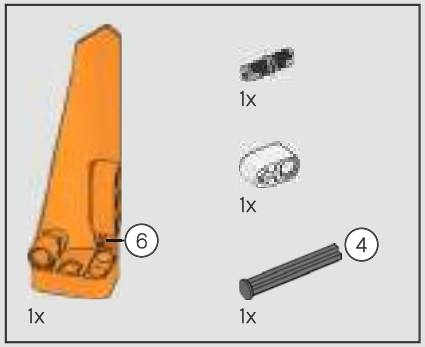

295

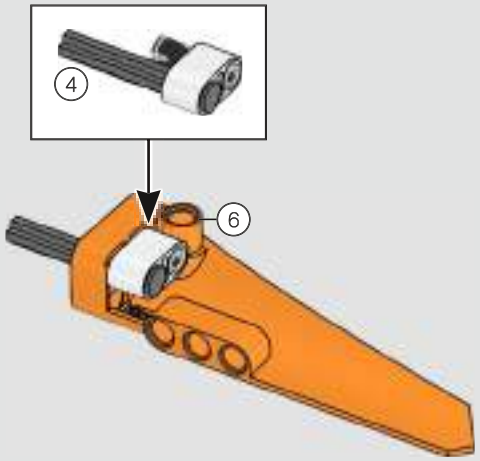

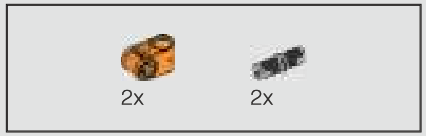

296

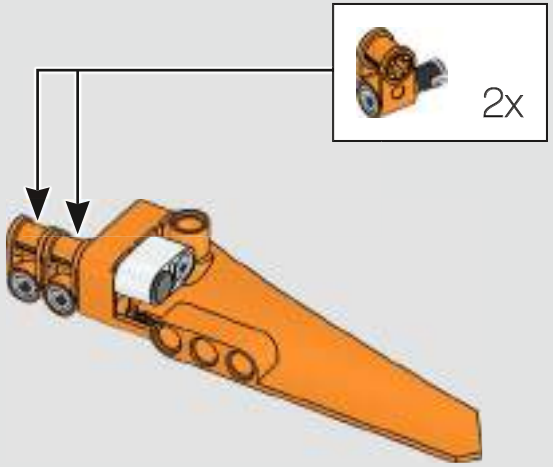

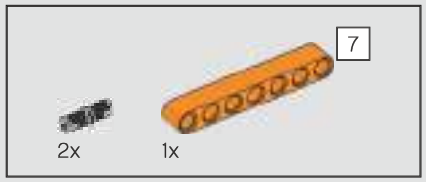

297

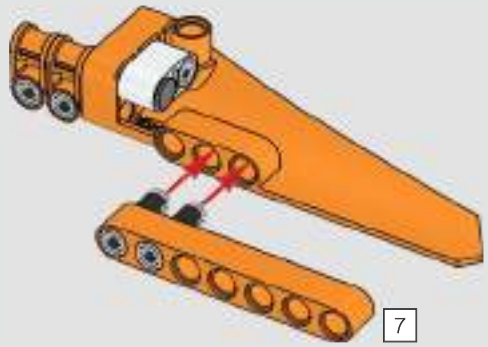

298

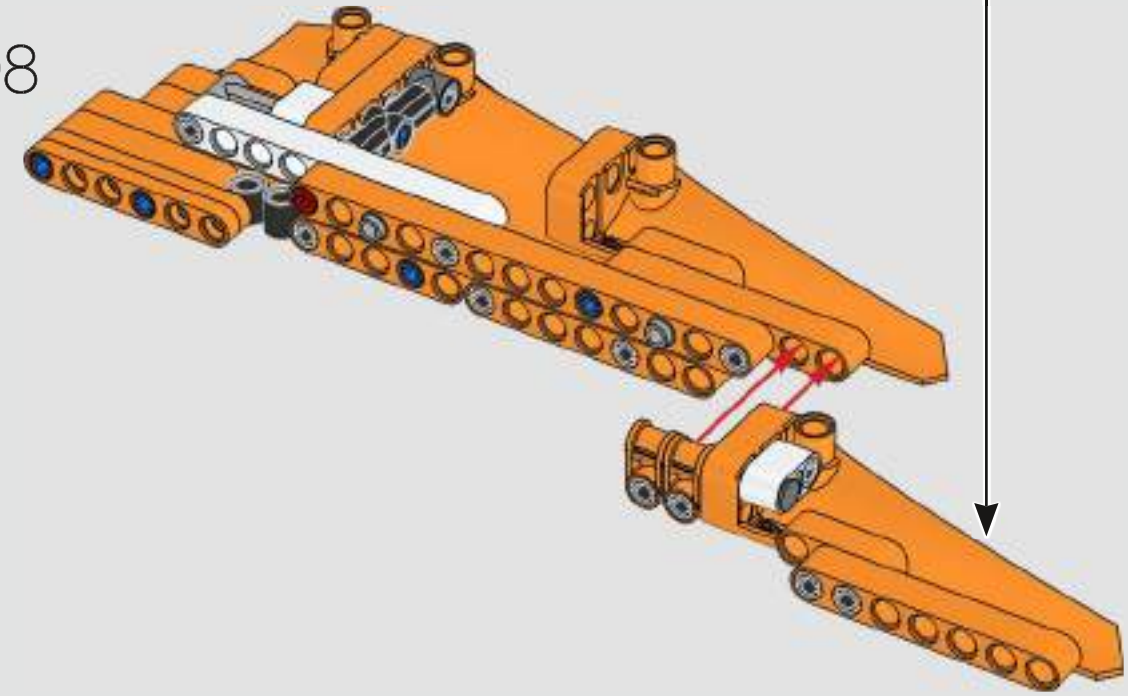

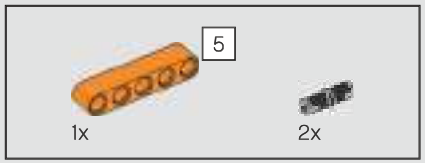

299

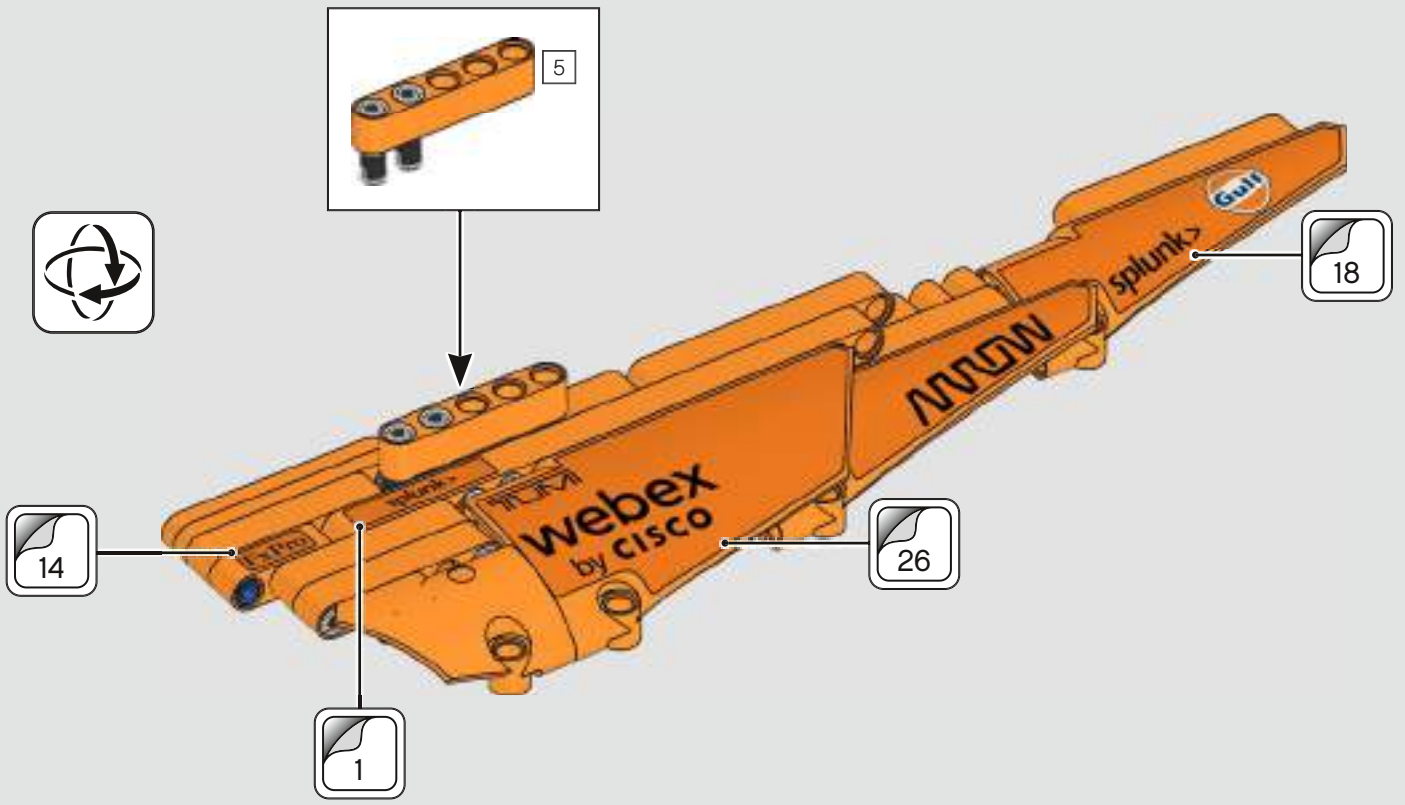

300

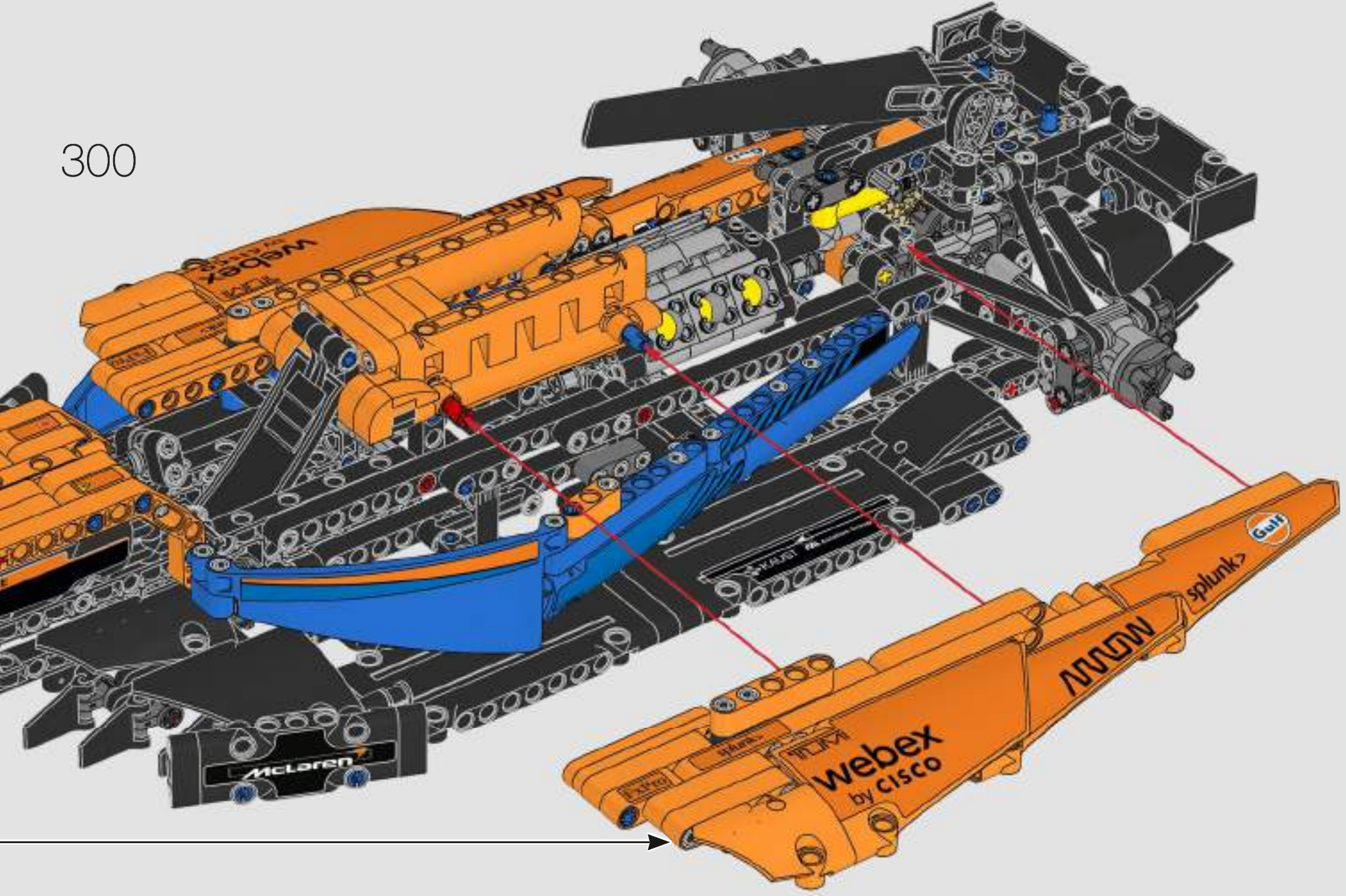

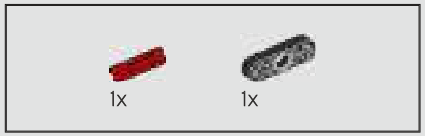

301

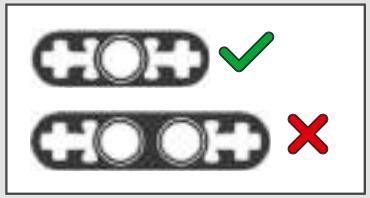

302

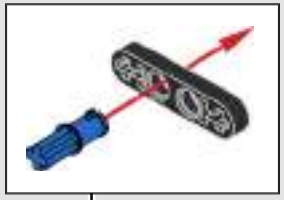

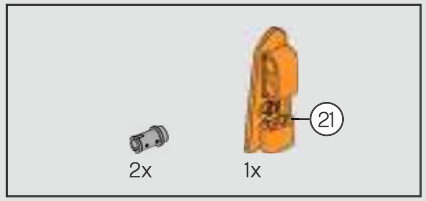

303

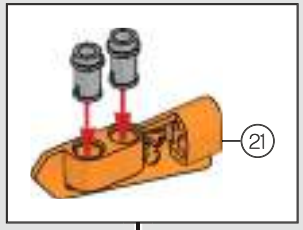

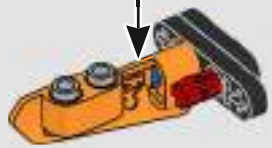

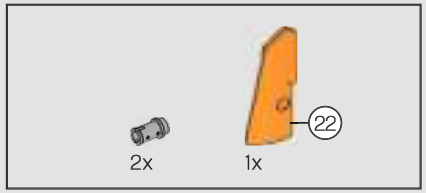

304

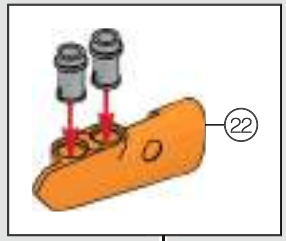

305

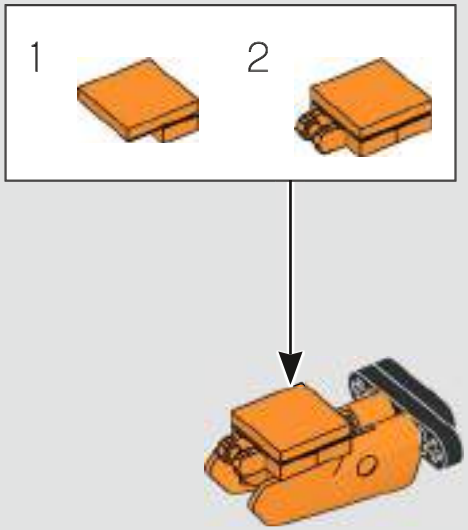

306

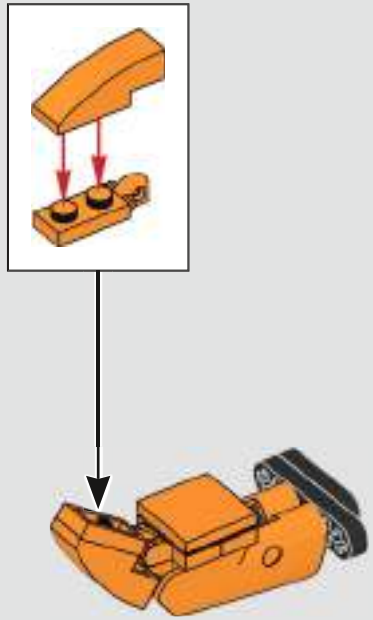

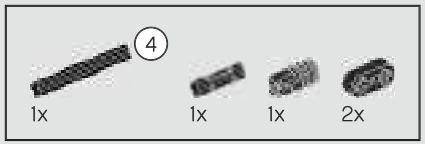

307

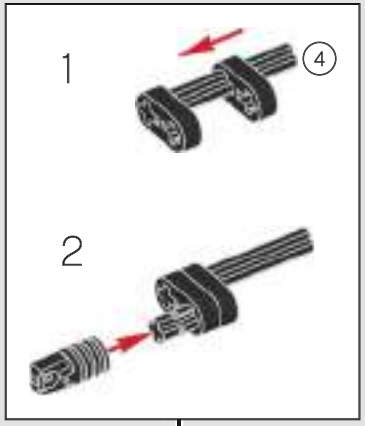

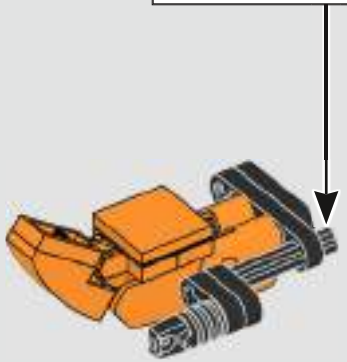

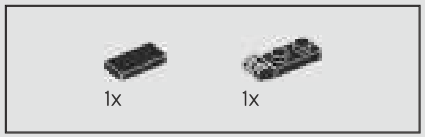

308

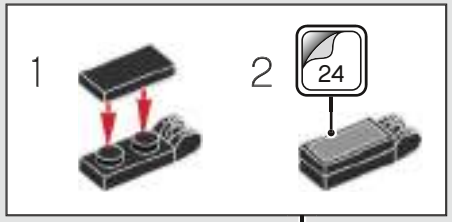

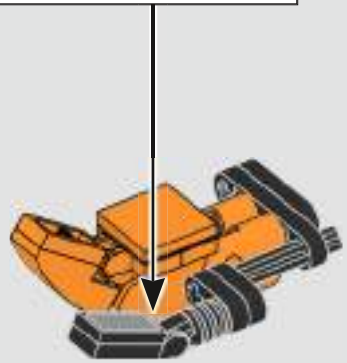

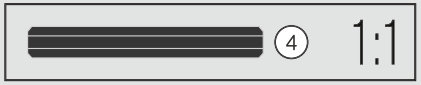

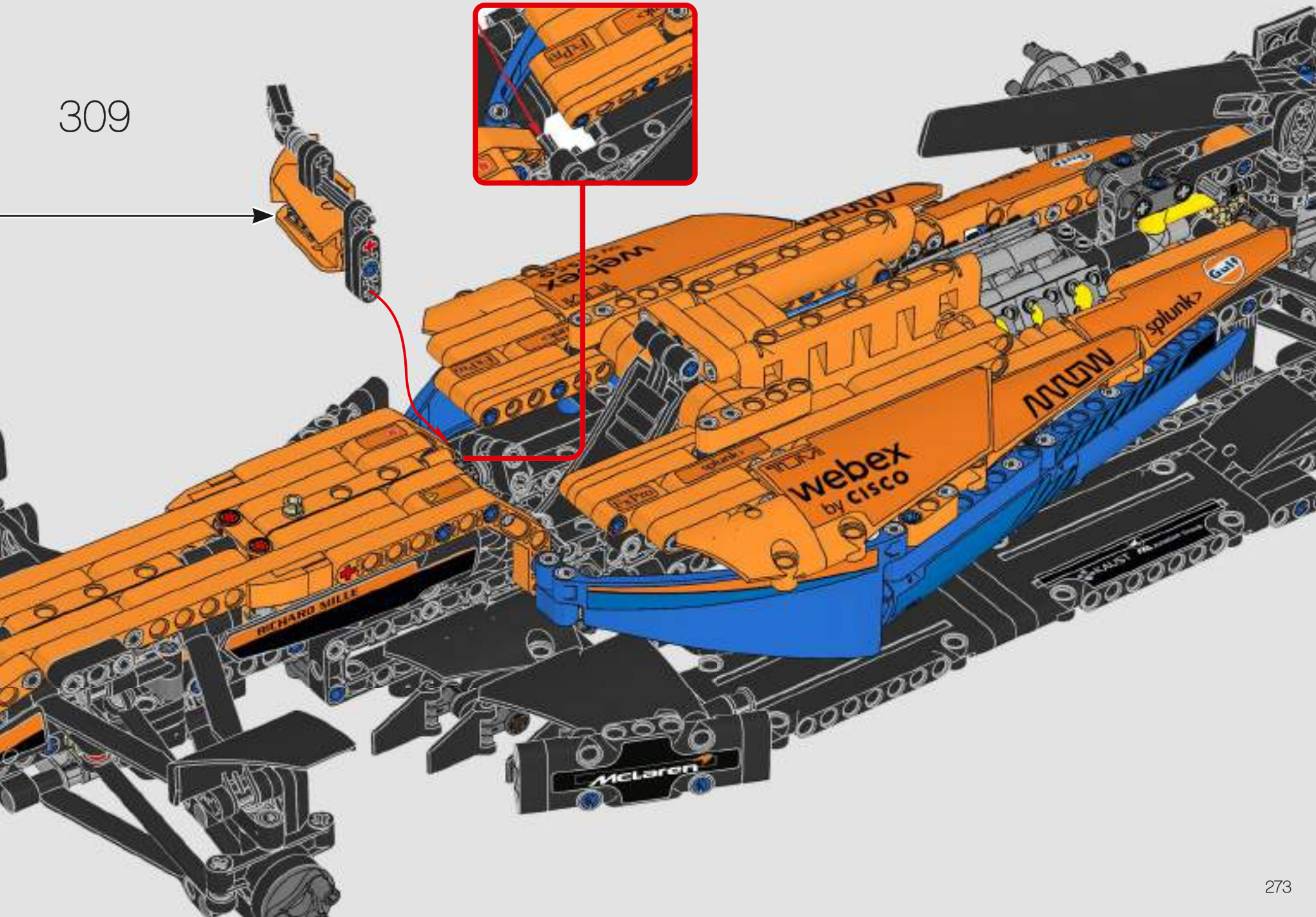
309
webex
by cisco
splunk>
Gulf
RICHARD MILLE
McLaren

310

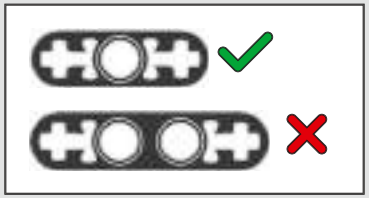

311

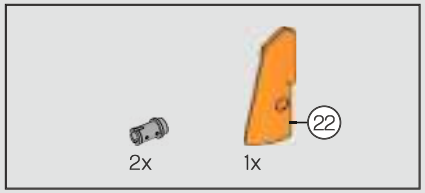

312

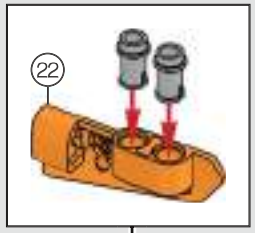

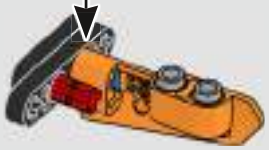

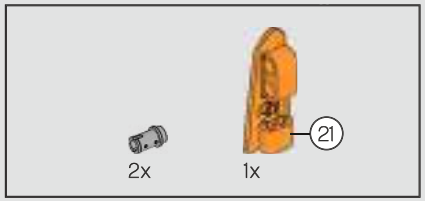

313

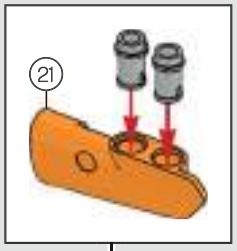

314

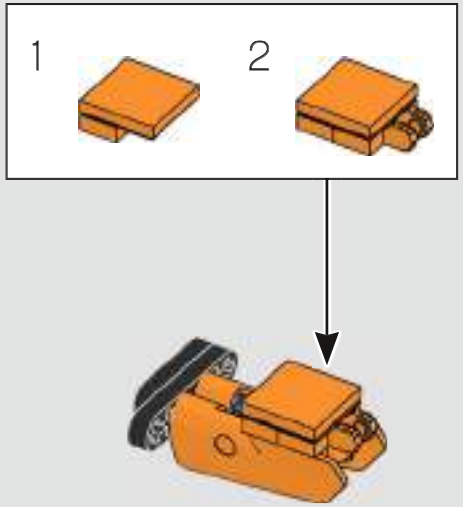

315

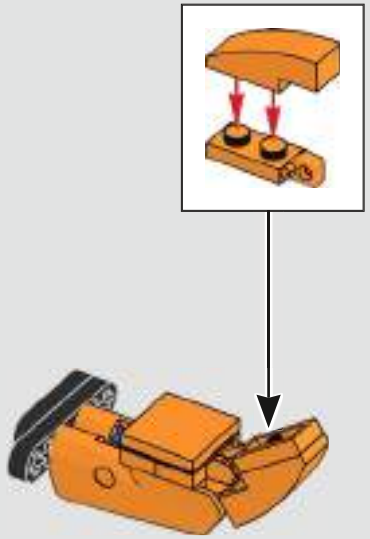

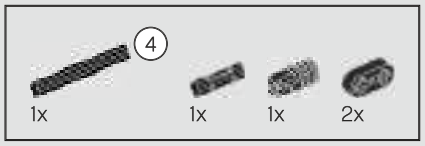

316

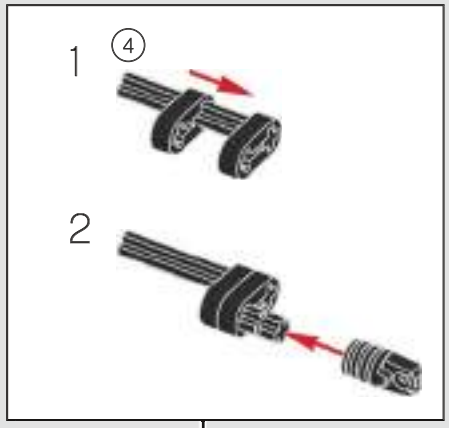

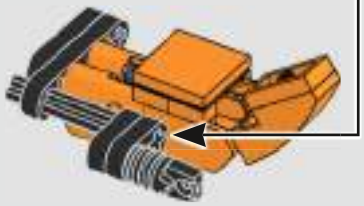

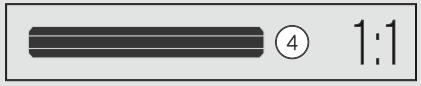

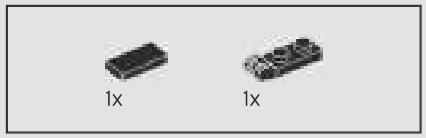

317

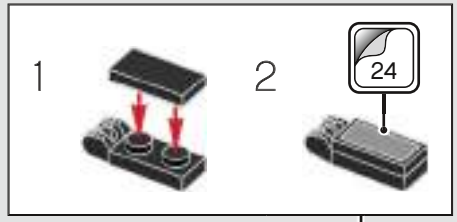

318

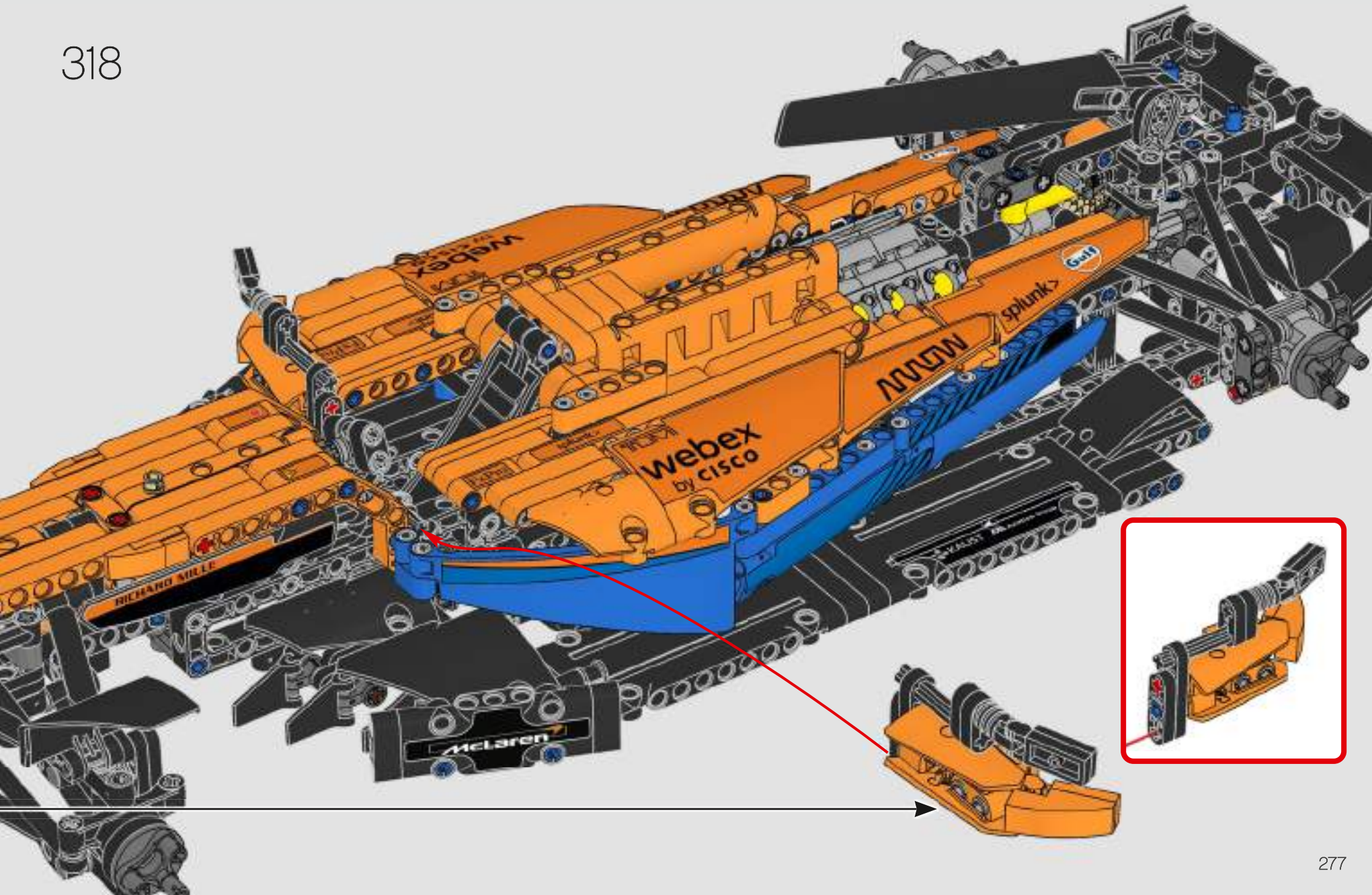

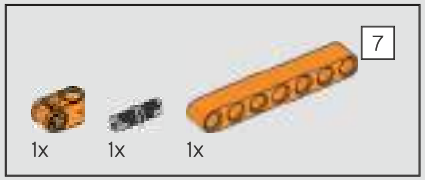

319

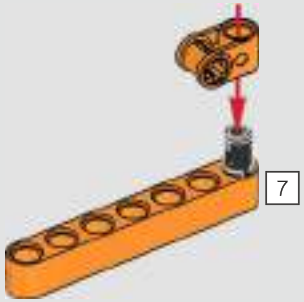

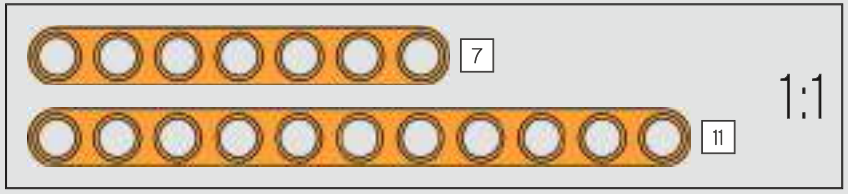

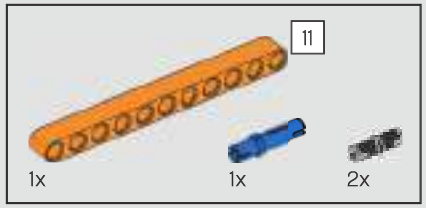

320

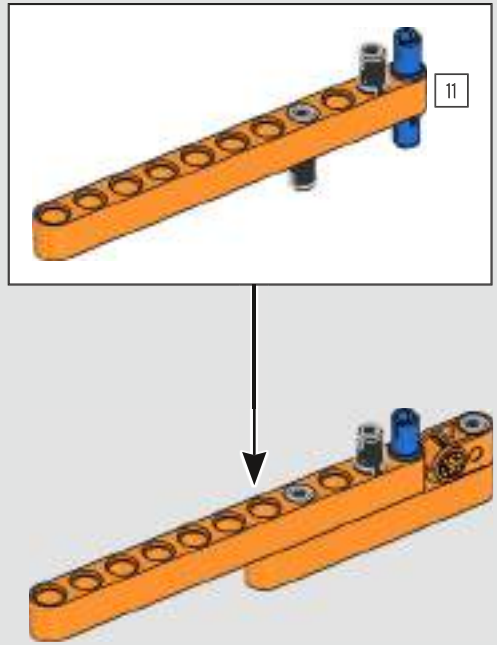

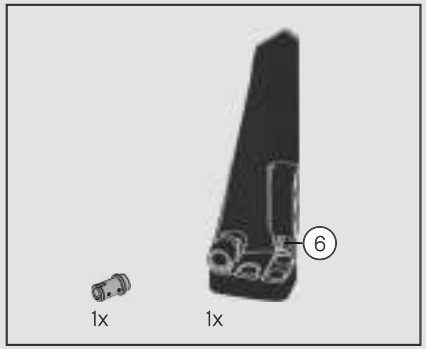

321

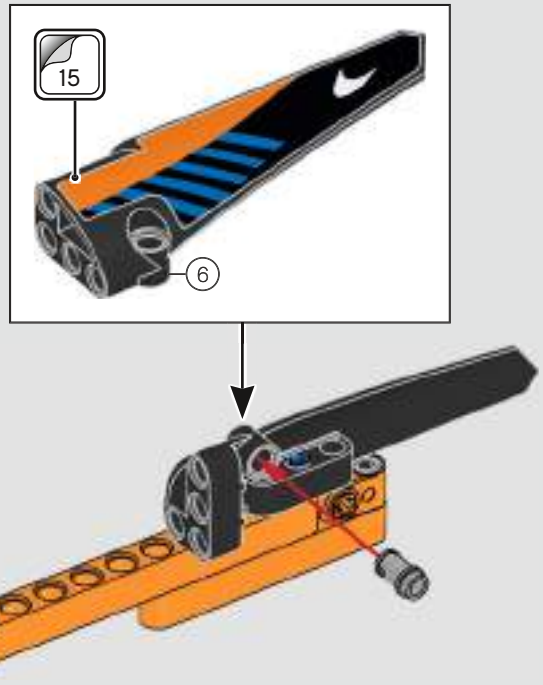

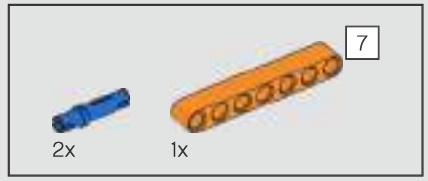

322

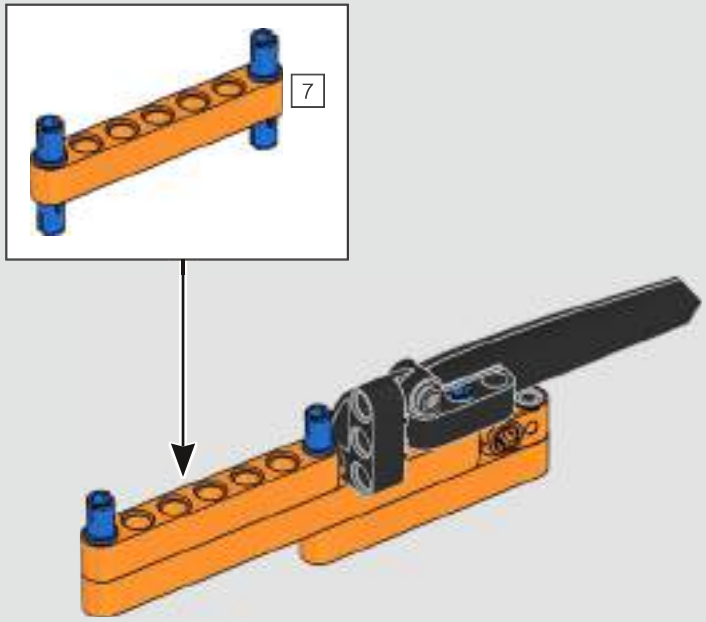

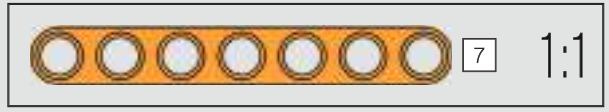

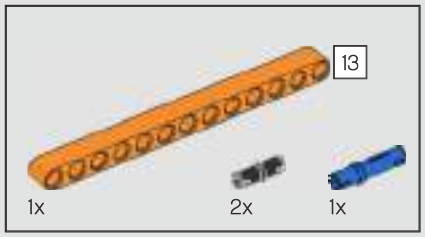

323

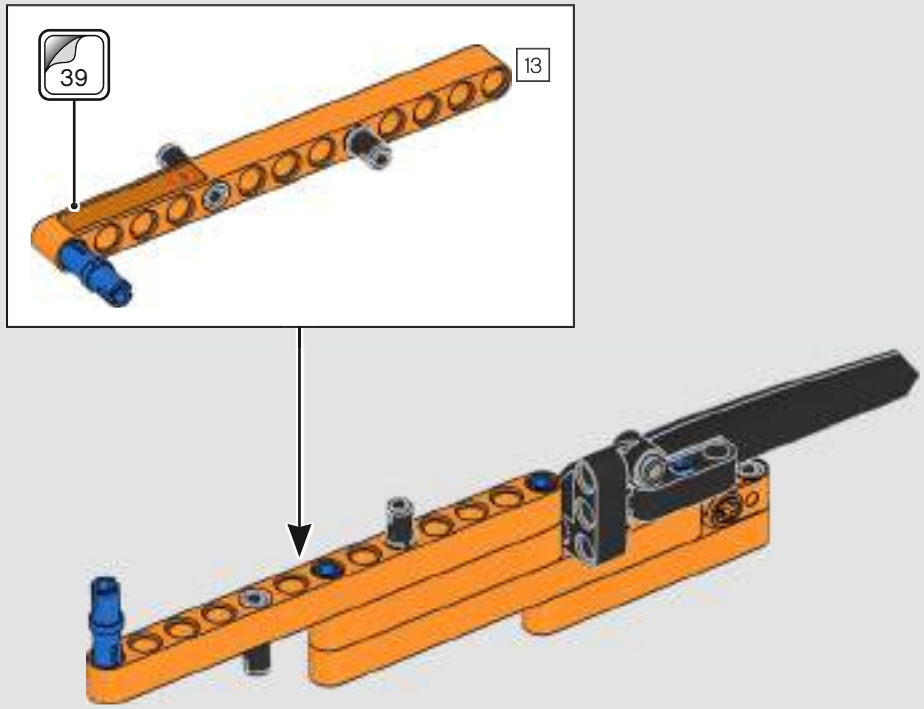

324

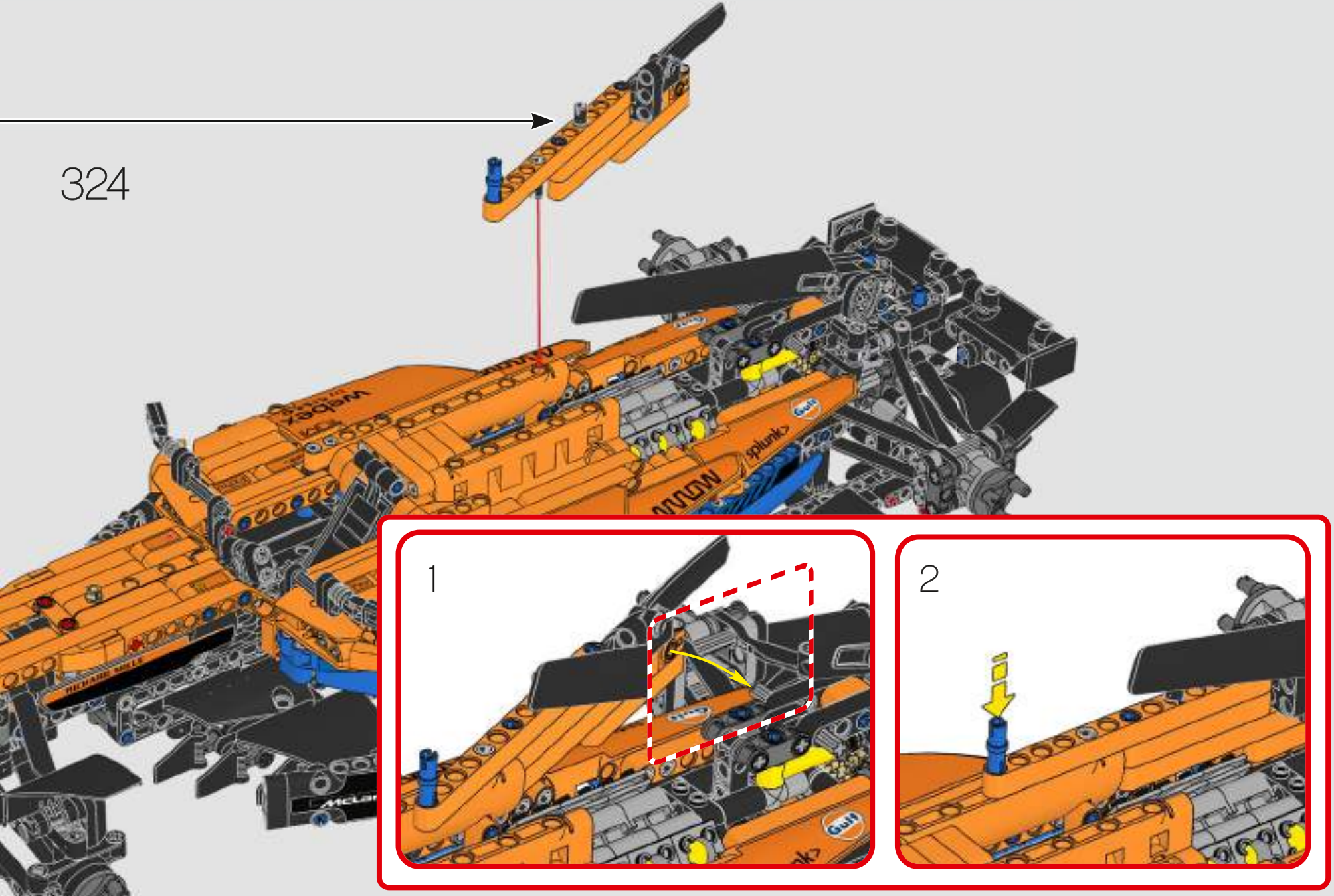

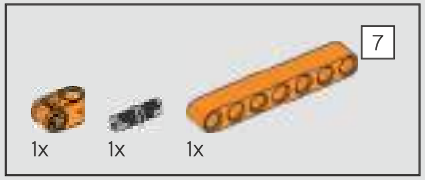

325

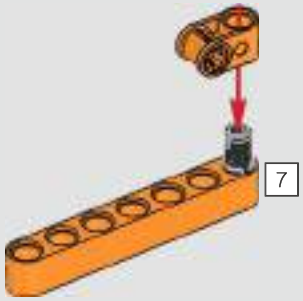

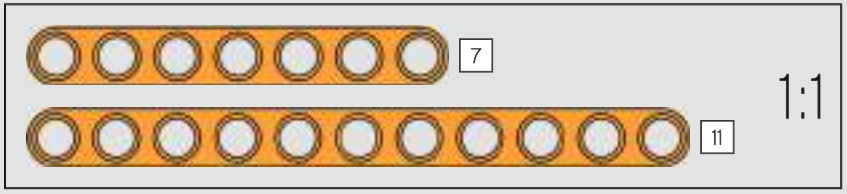

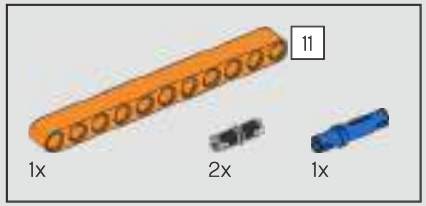

326

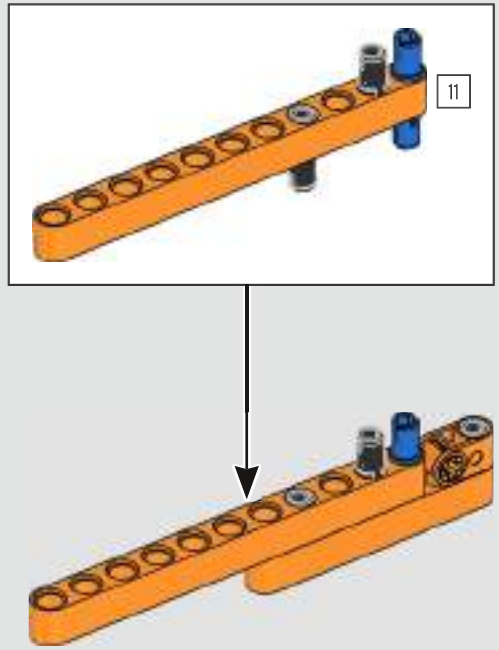

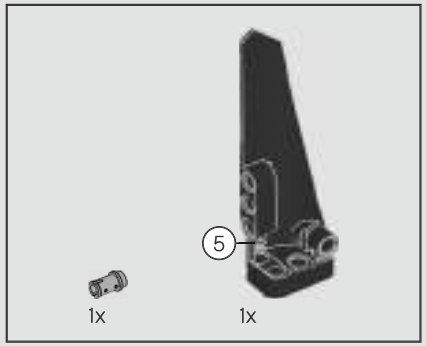

327

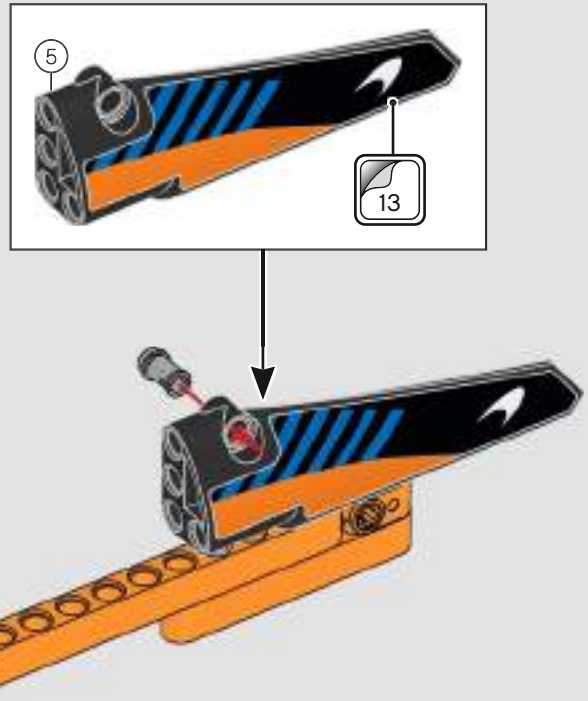

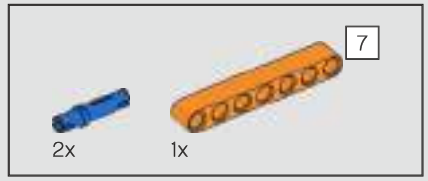

328

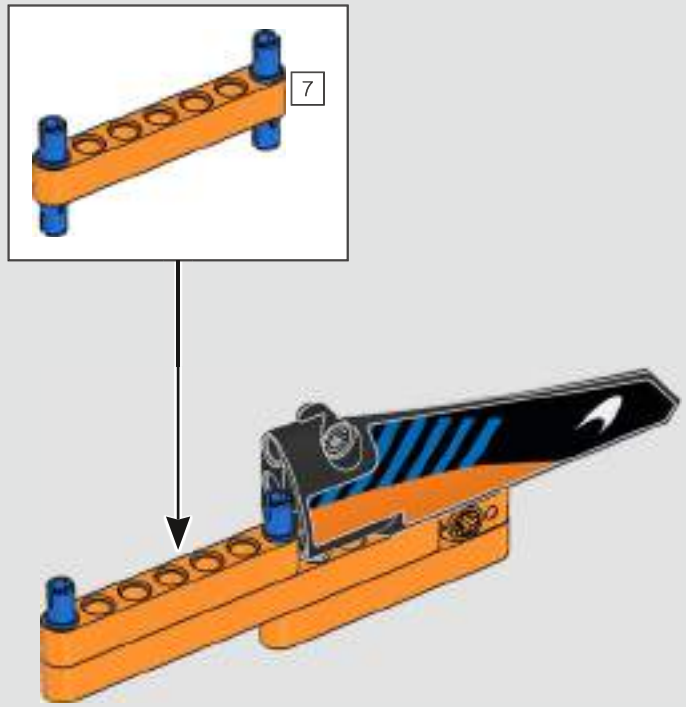

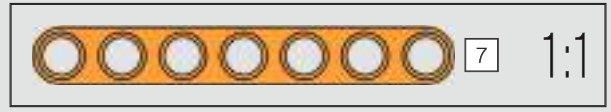

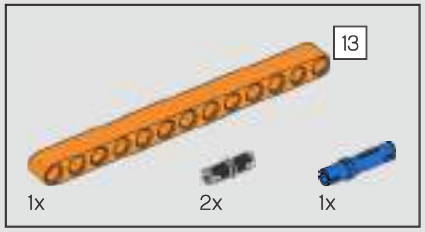

329

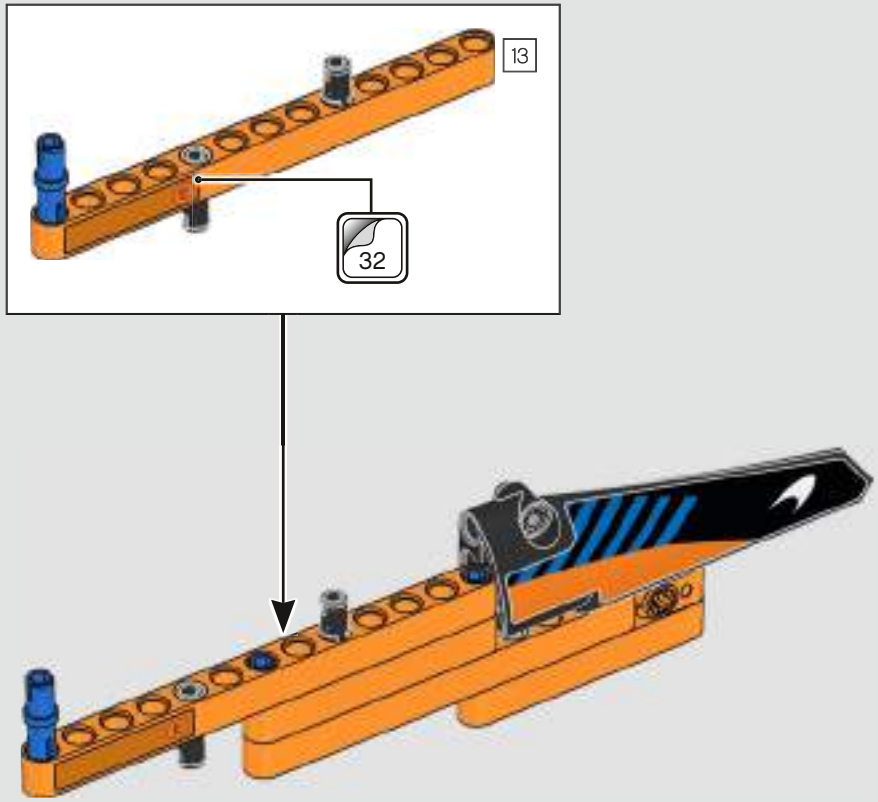

330

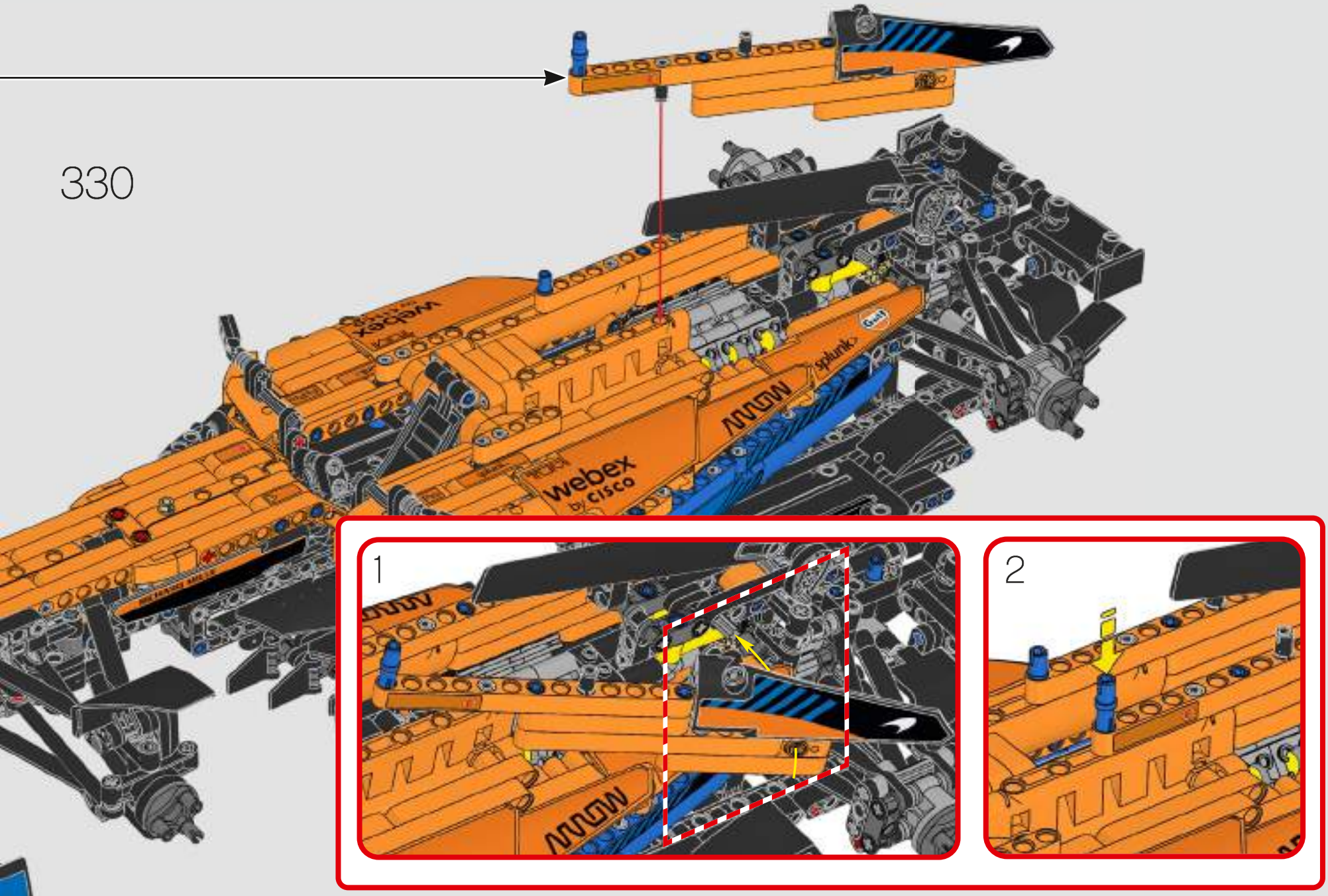

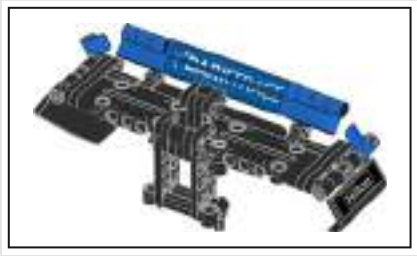

331

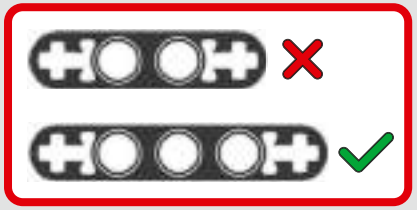

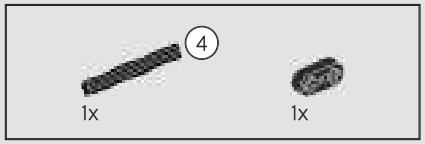

332

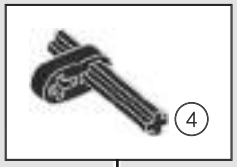

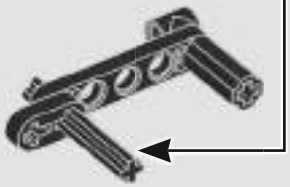

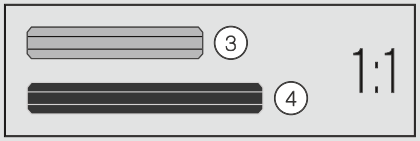

333

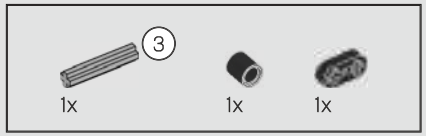

334

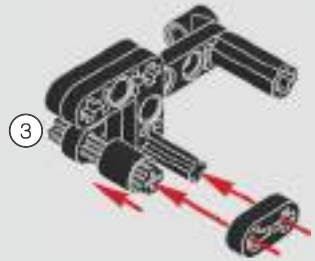

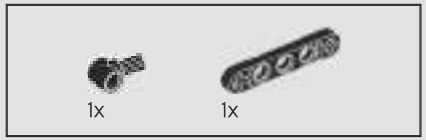

335

336

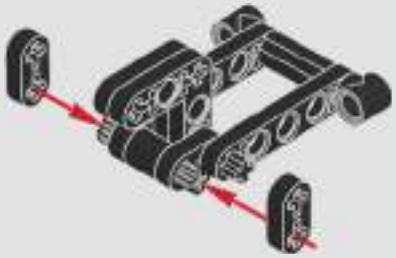

337

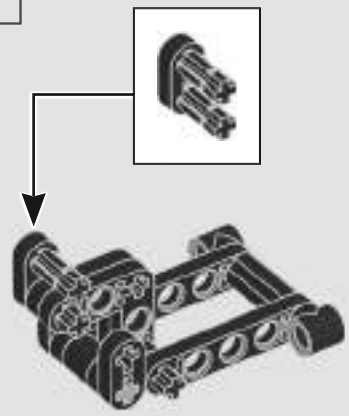

338

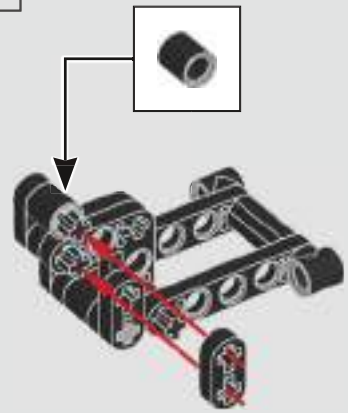

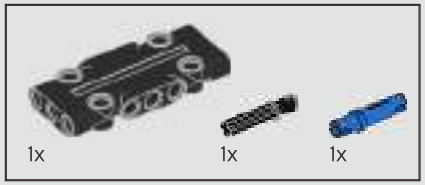

339

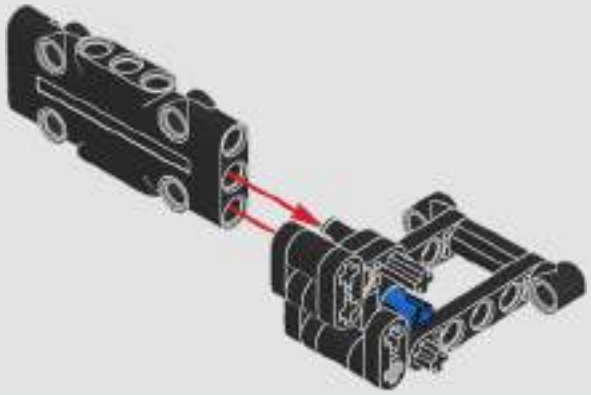

340

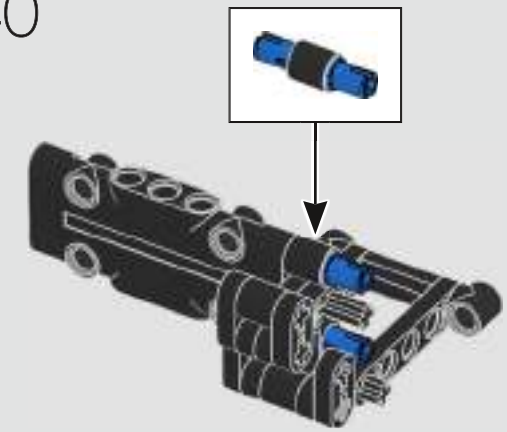

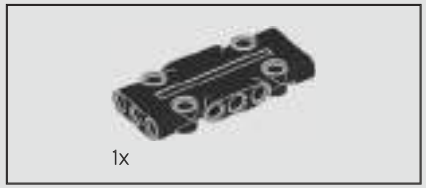

341

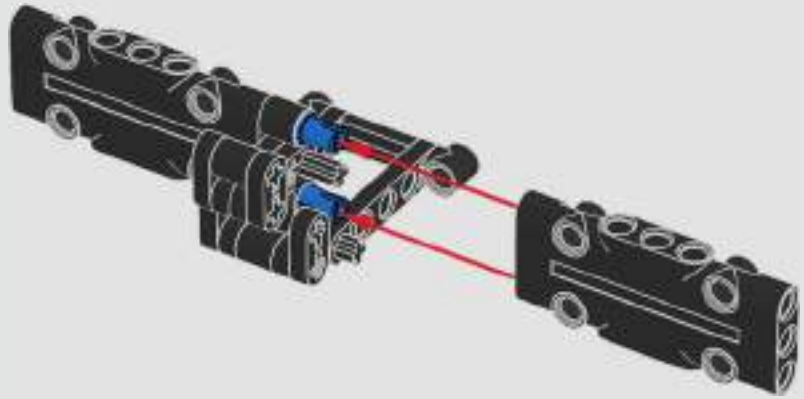

342

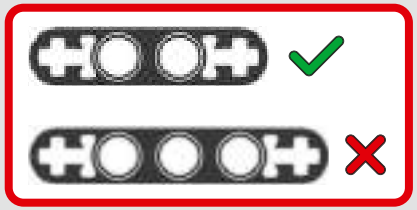

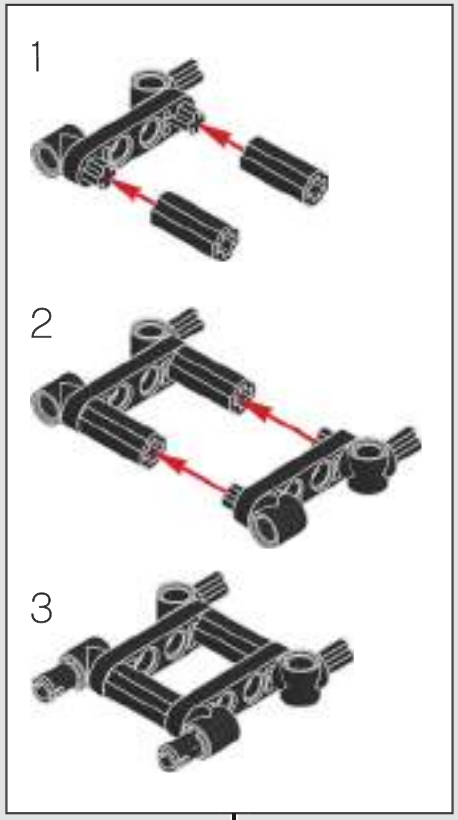

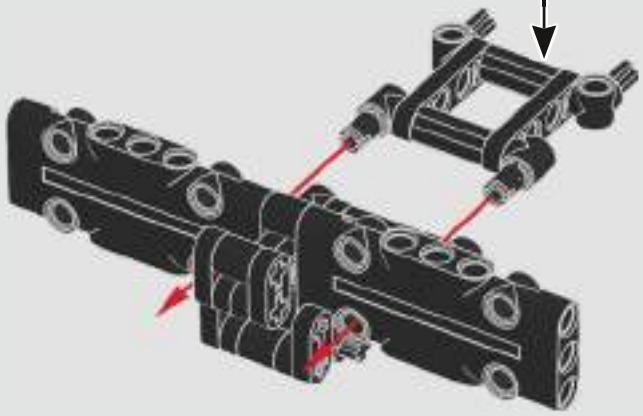

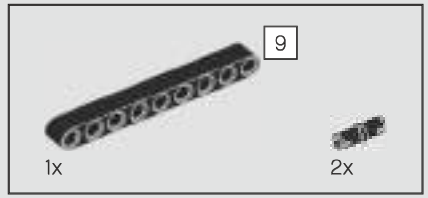

343

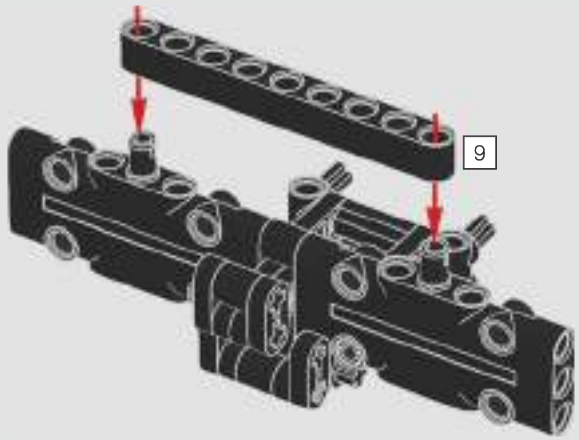

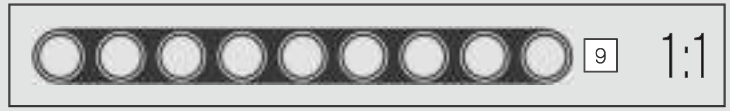

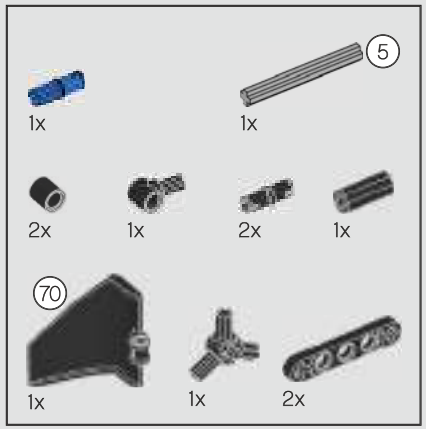

344

1

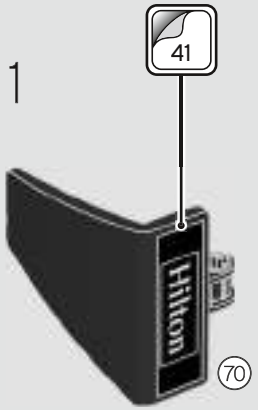

2

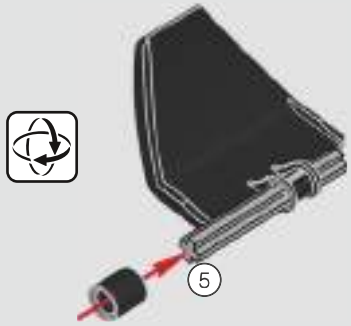

3

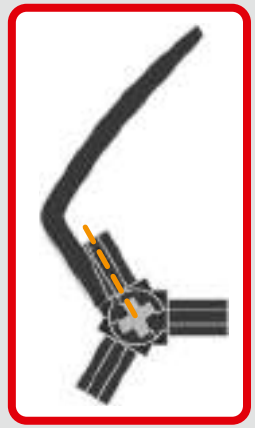

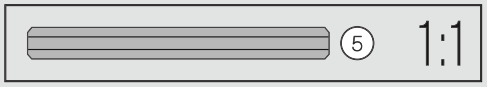

4

5

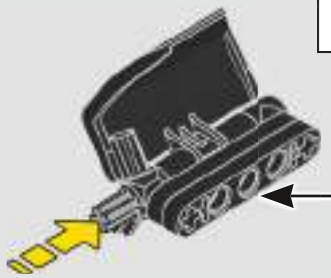

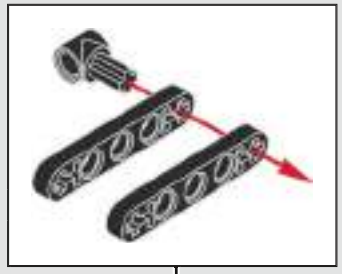

6

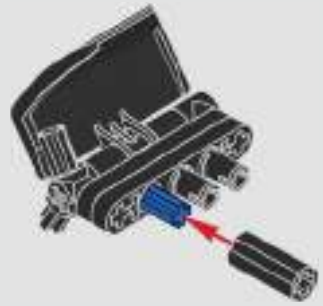

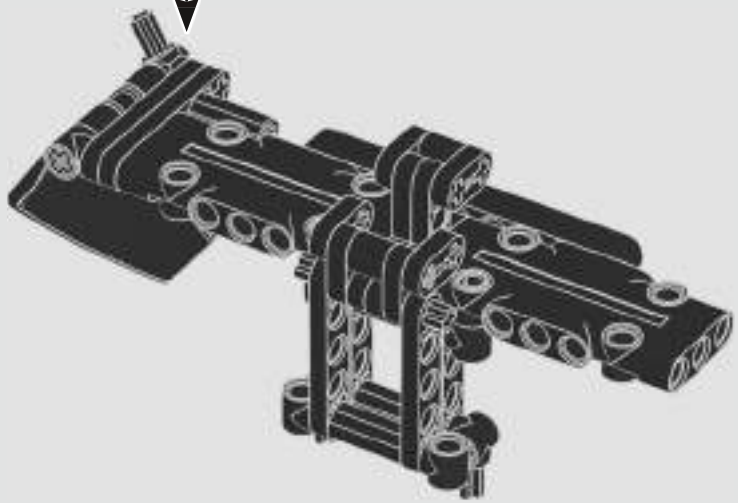

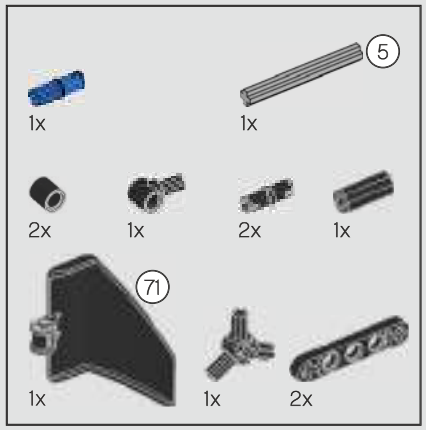

345

1

2

3

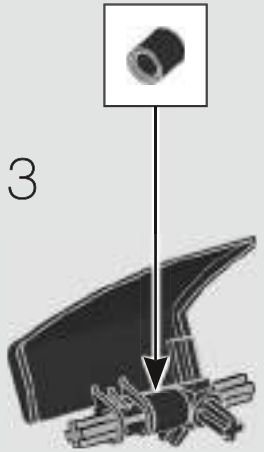

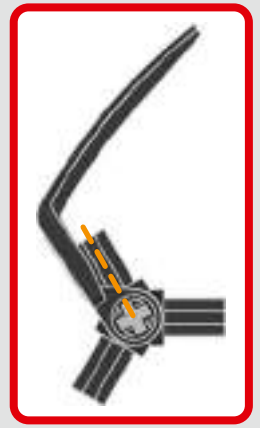

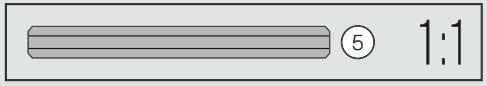

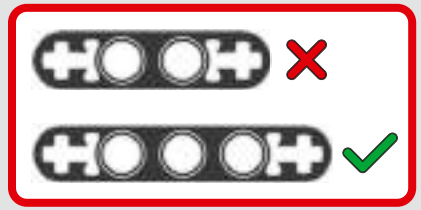

4

5

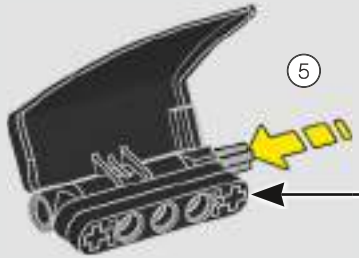

6

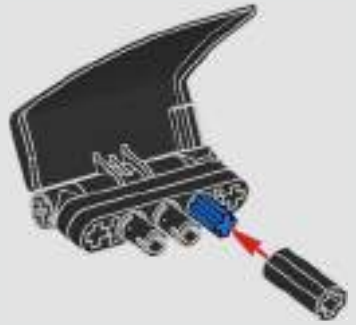

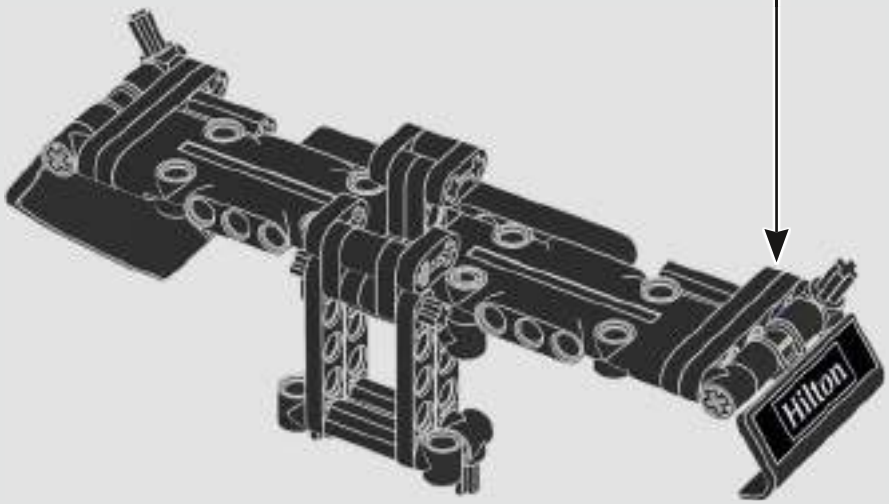

346

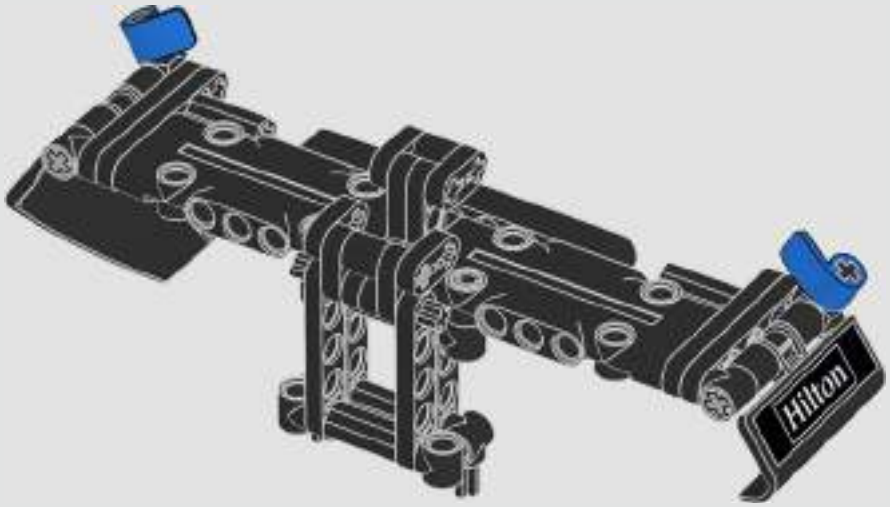

347

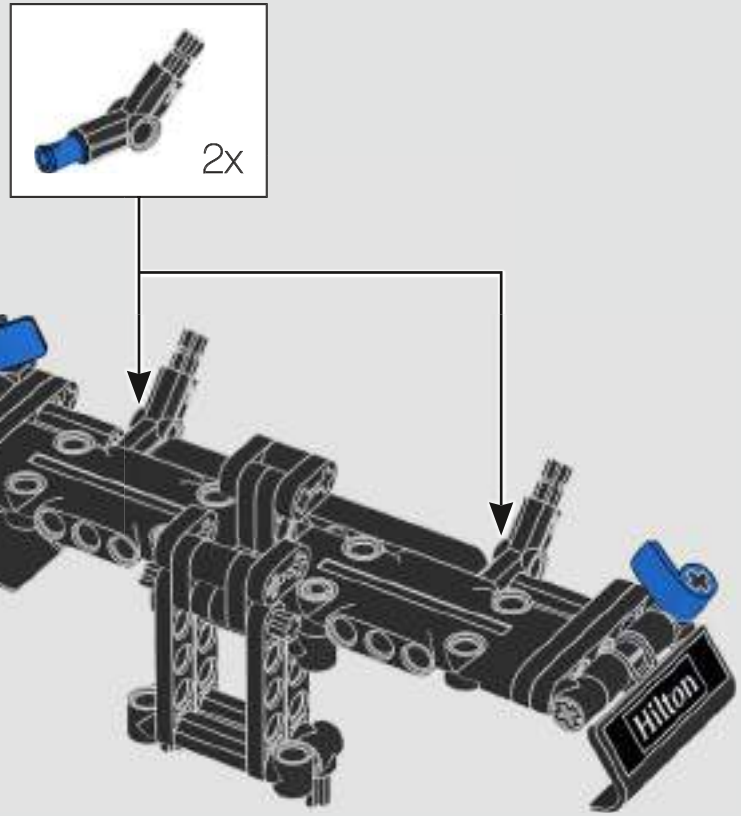

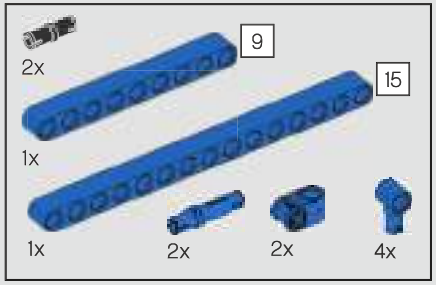

348

1

2

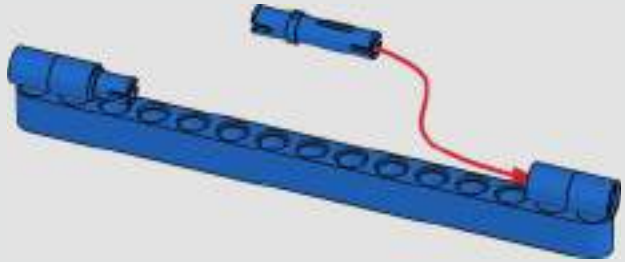

3

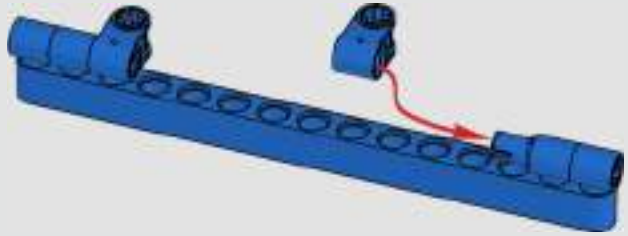

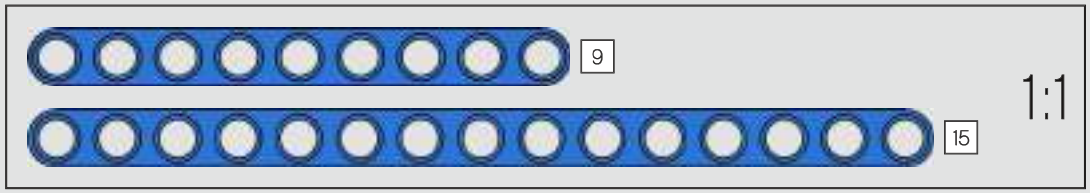

4

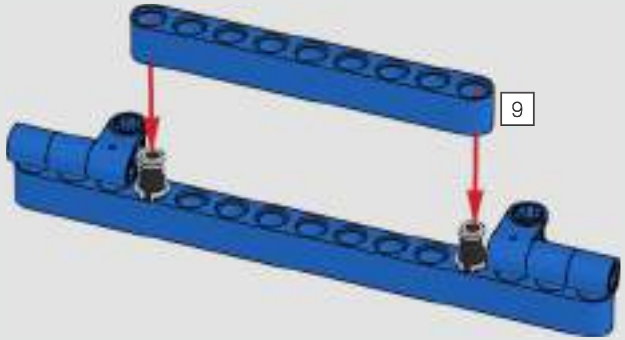

5

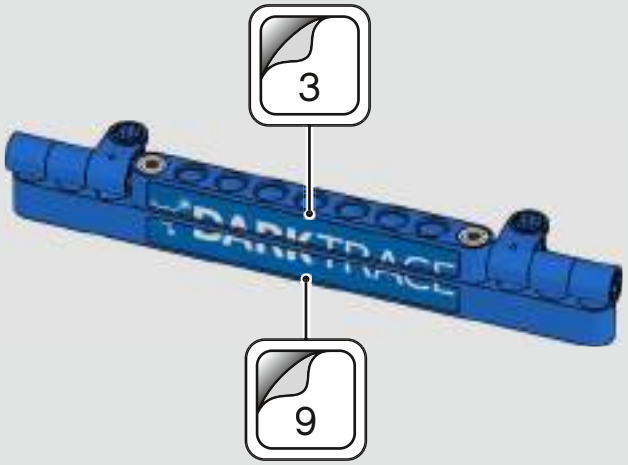

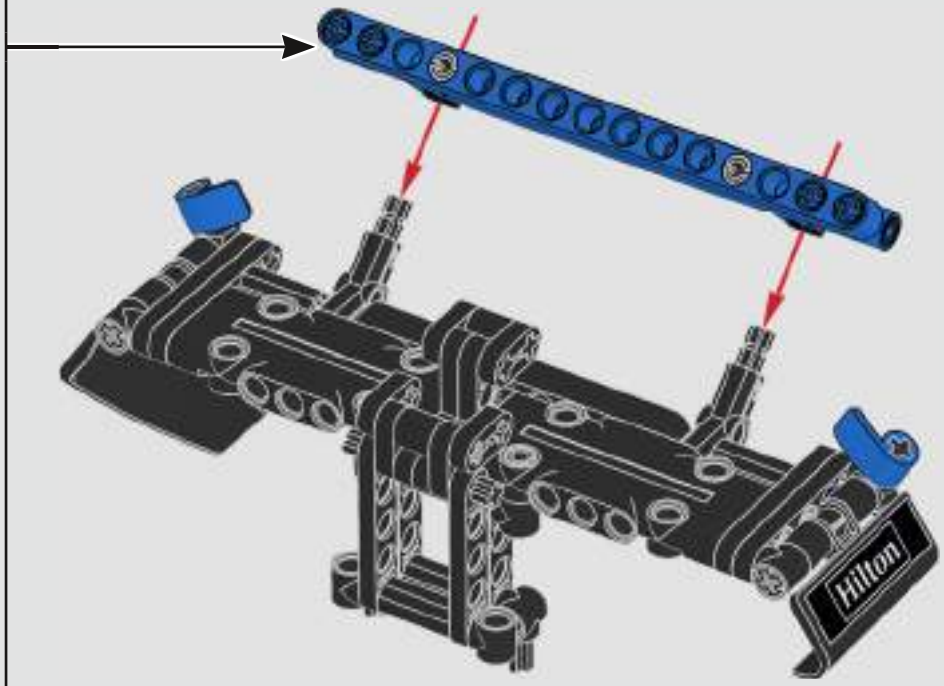

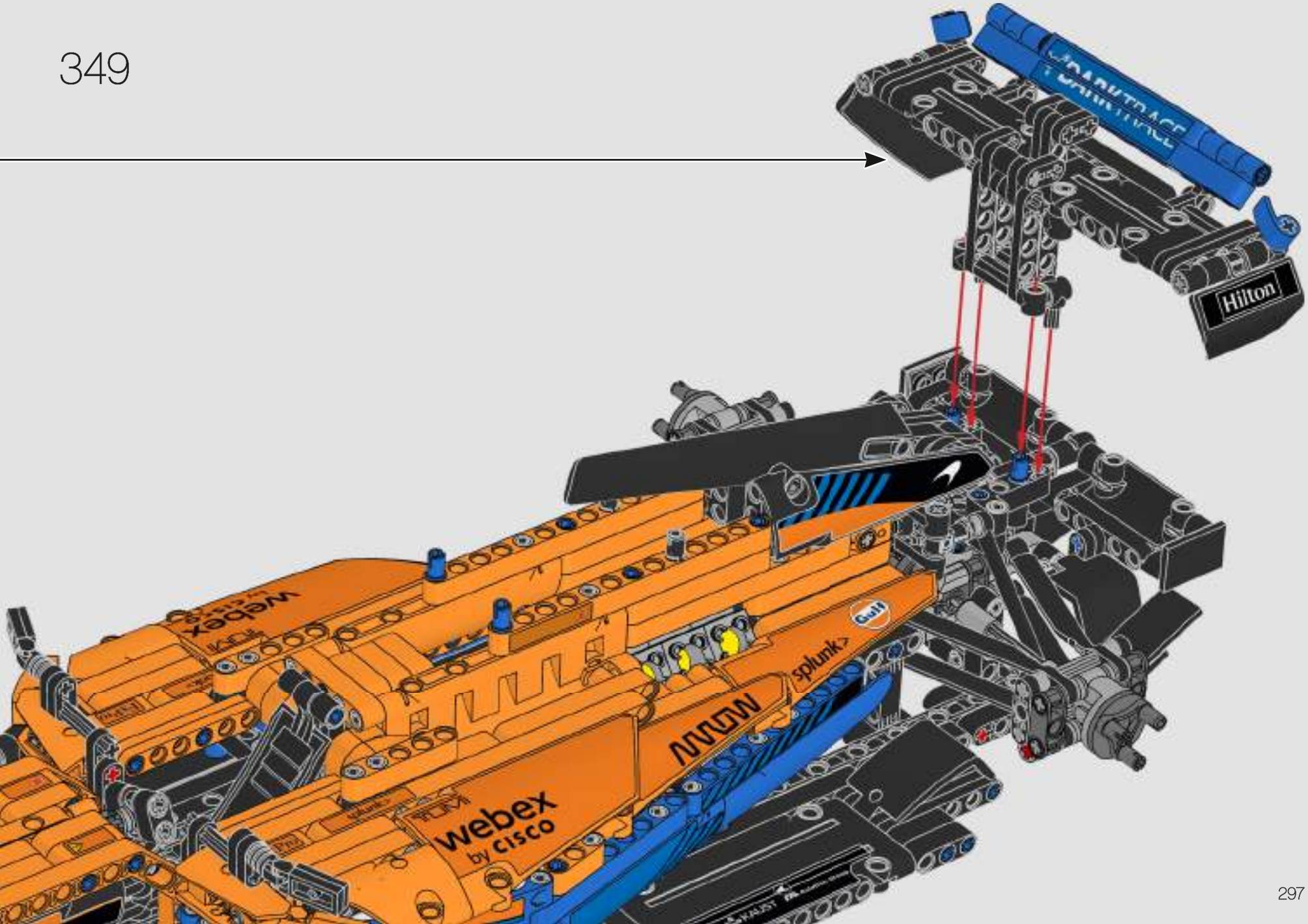
349
Hilton
webex
by cisco
splunk>
Gulf

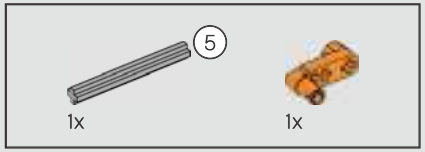

350

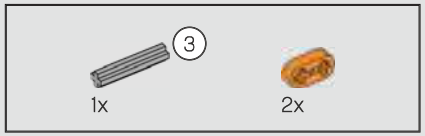

351

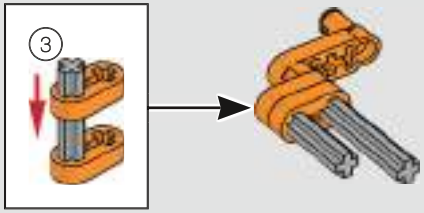

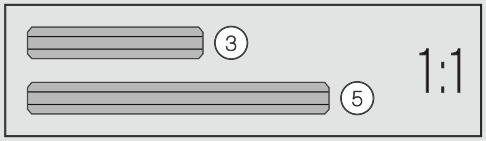

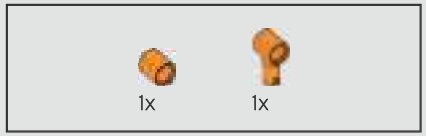

352

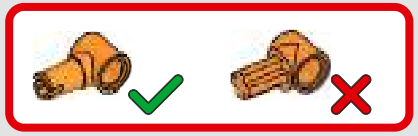

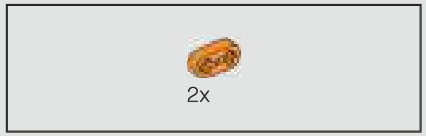

353

354

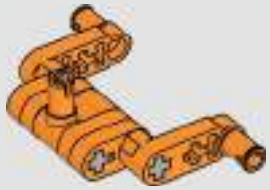

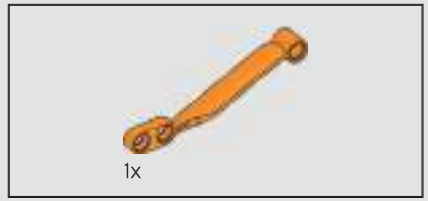

355

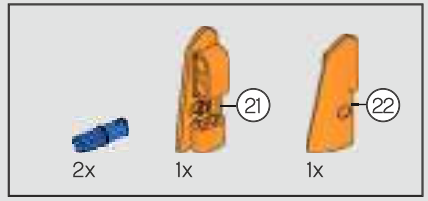

356

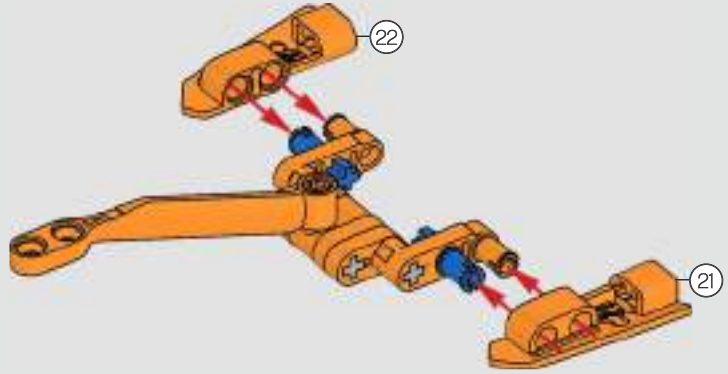

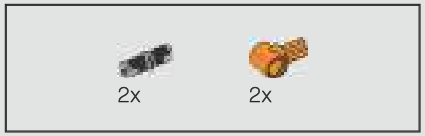

357

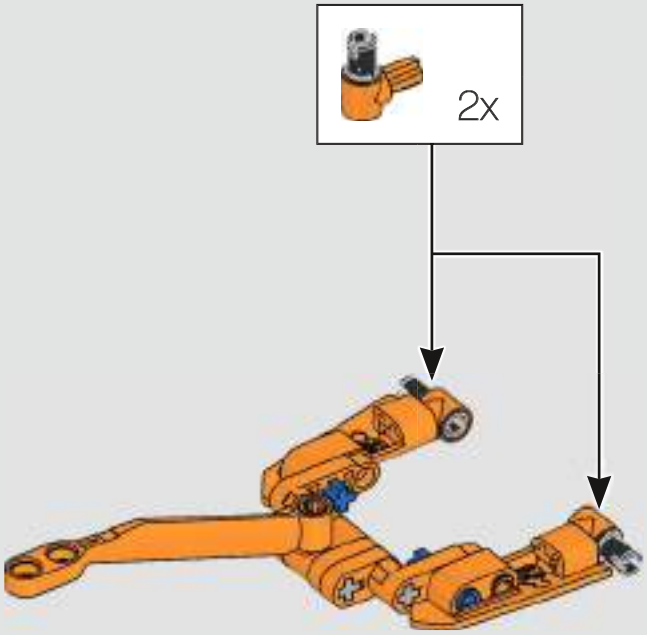

358

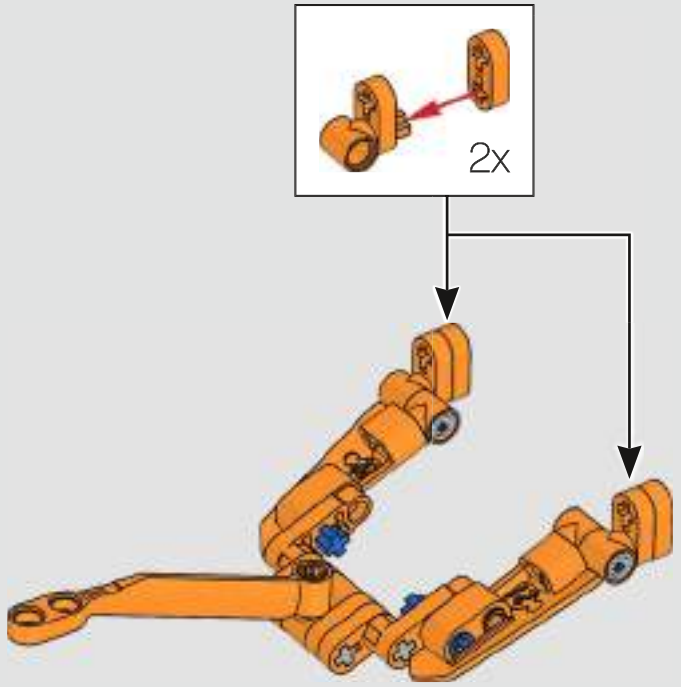

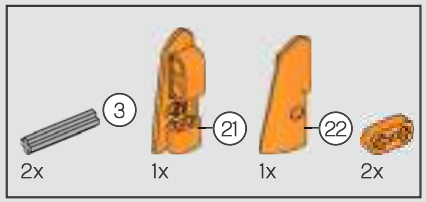

359

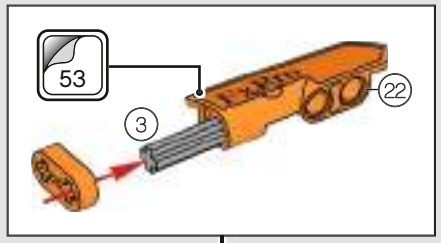

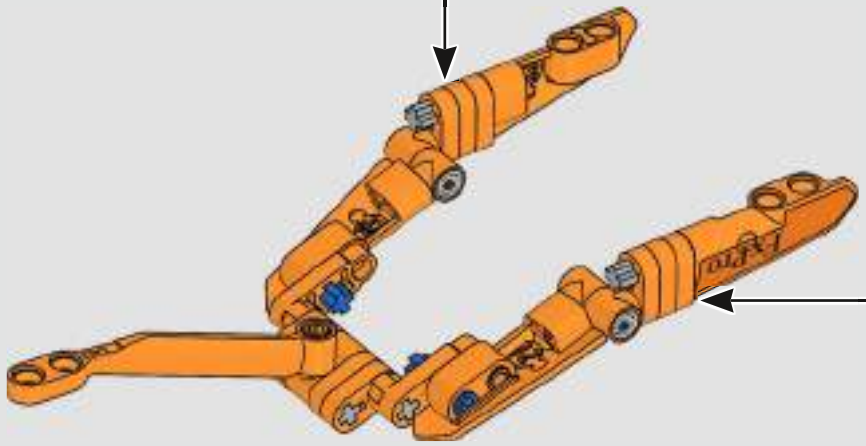

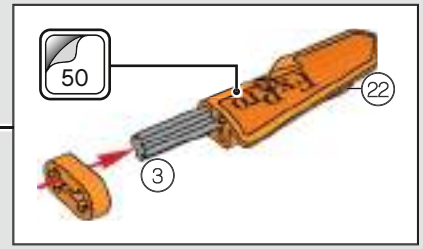

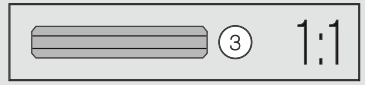

4x

360

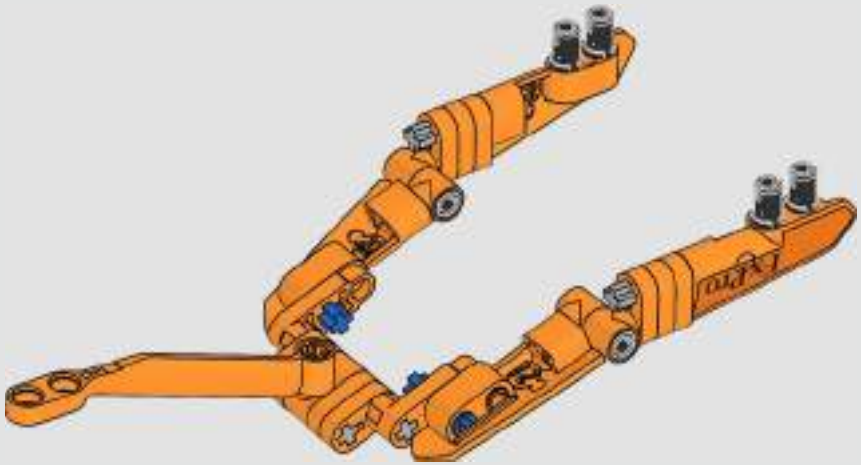

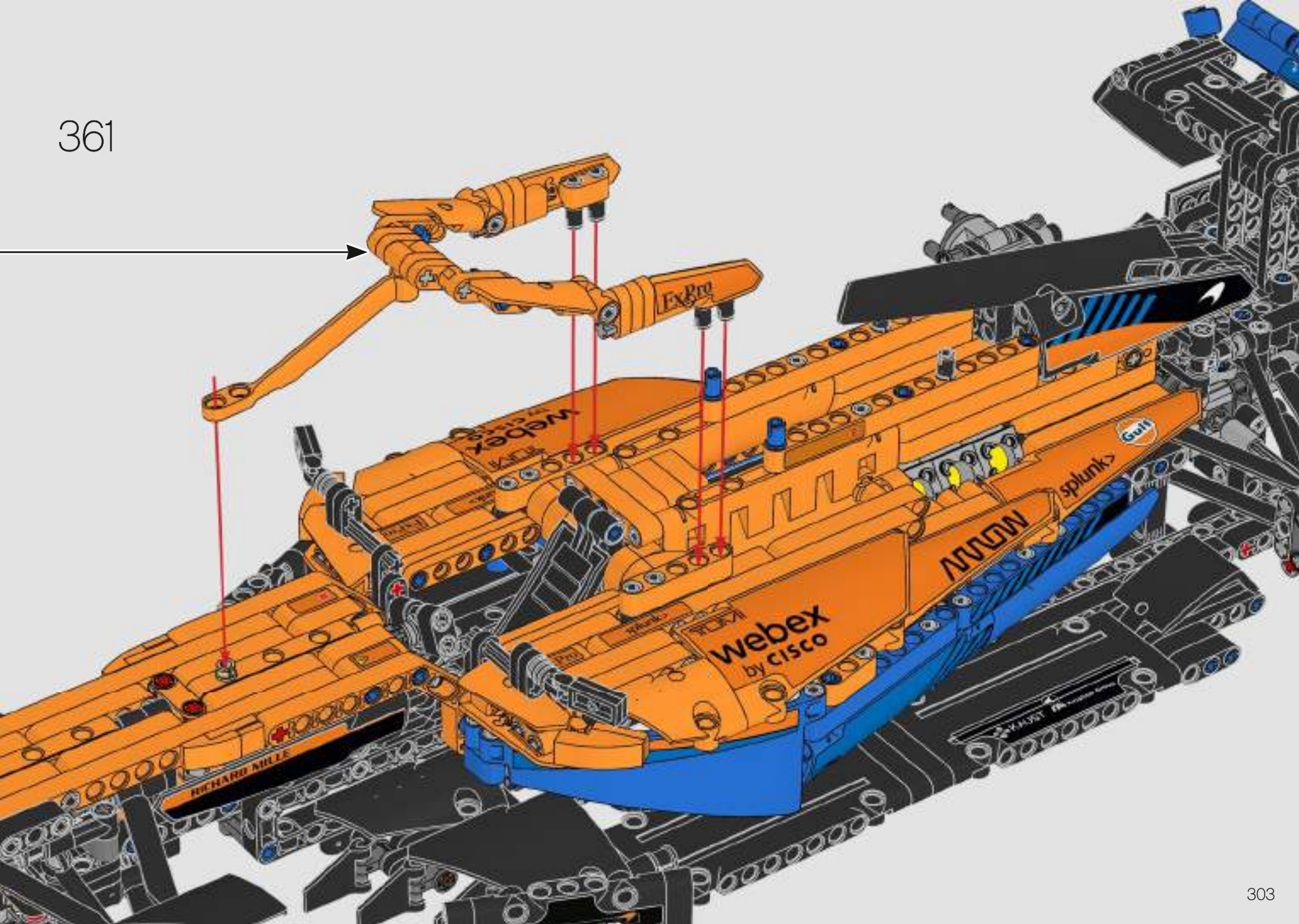
361
webex
by cisco
splunk>
Gulf
RICHARD MILLE

362

363

364

365

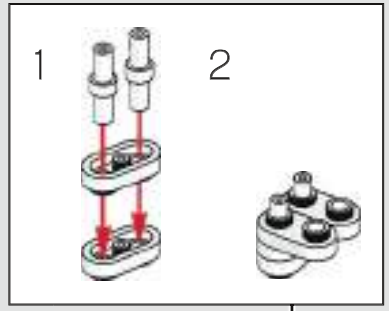

366

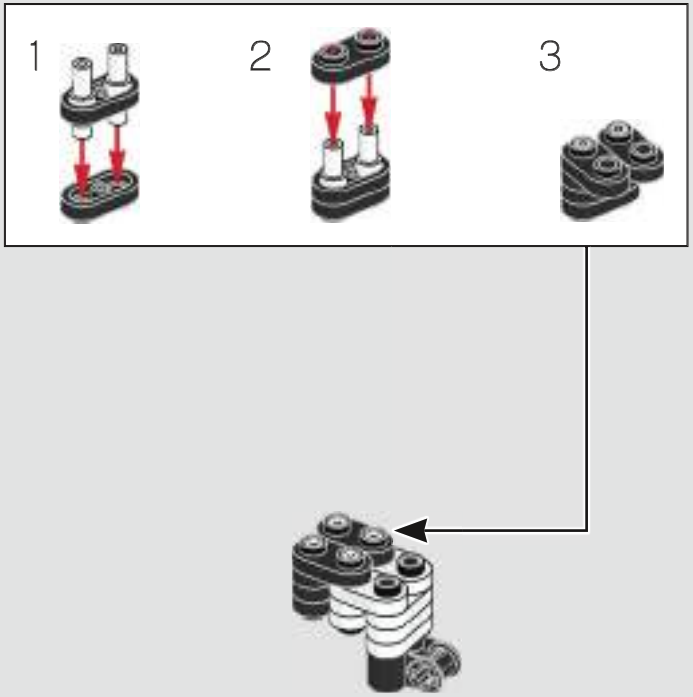

367

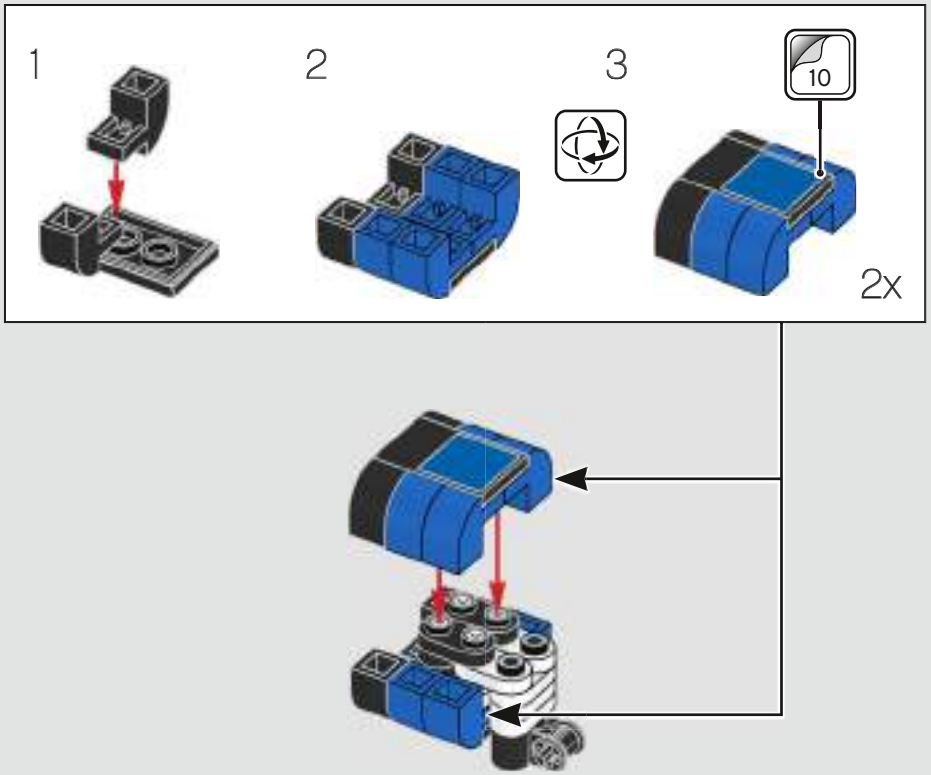

368

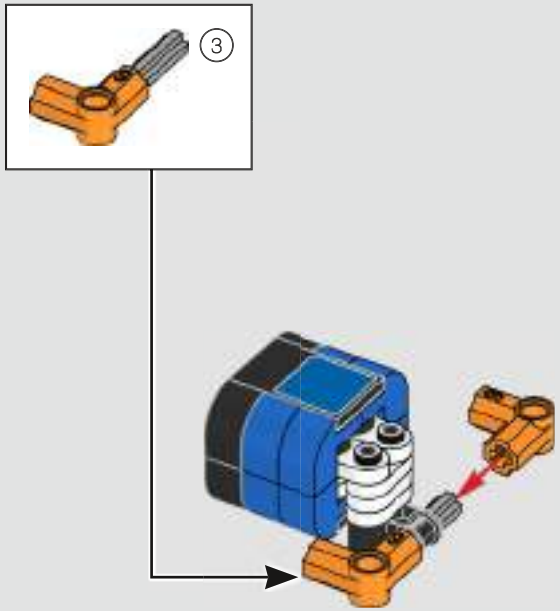

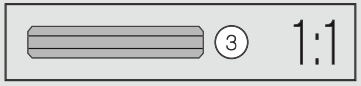

369

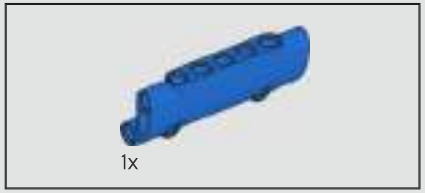

370

371

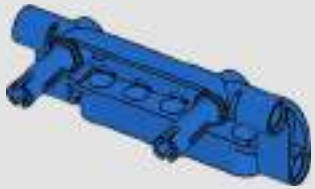

372

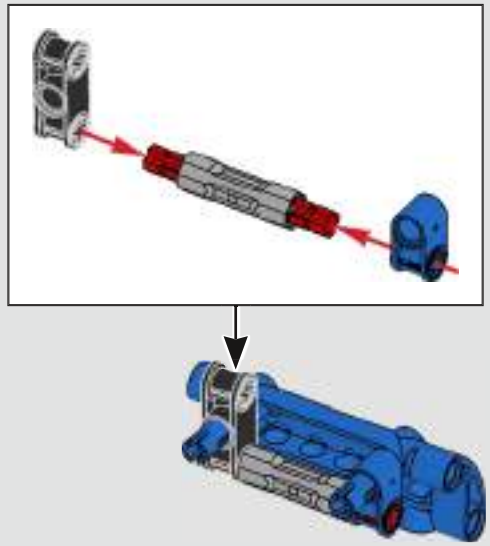

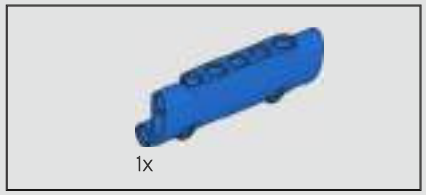

373

374

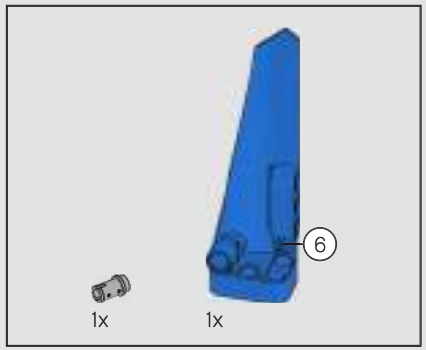

375

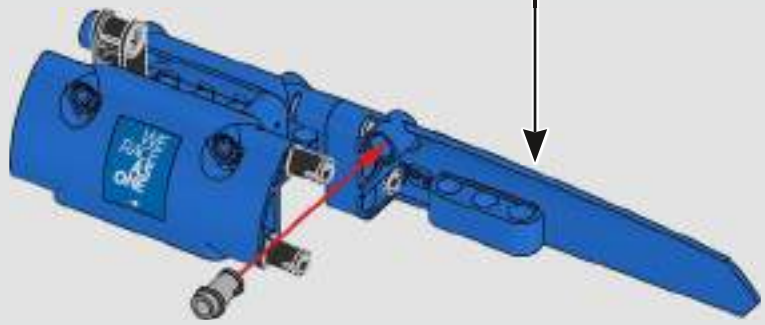

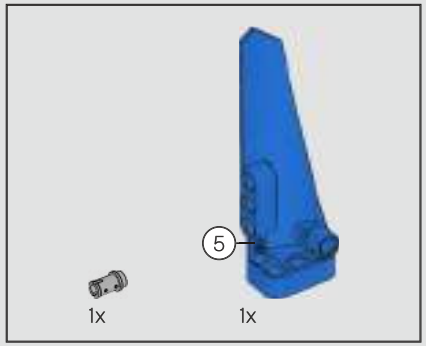

376

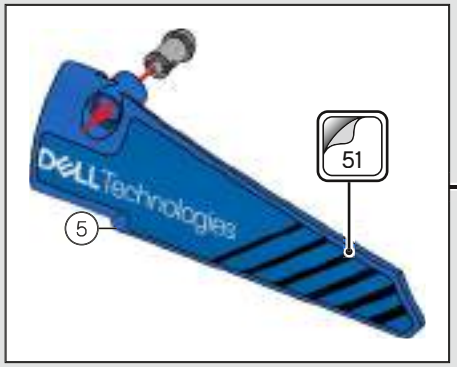

377

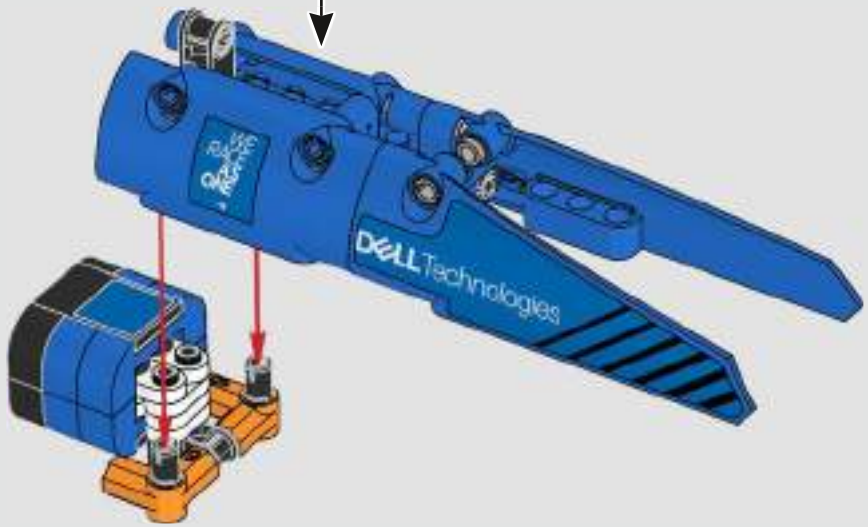

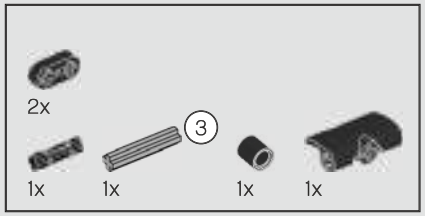

378

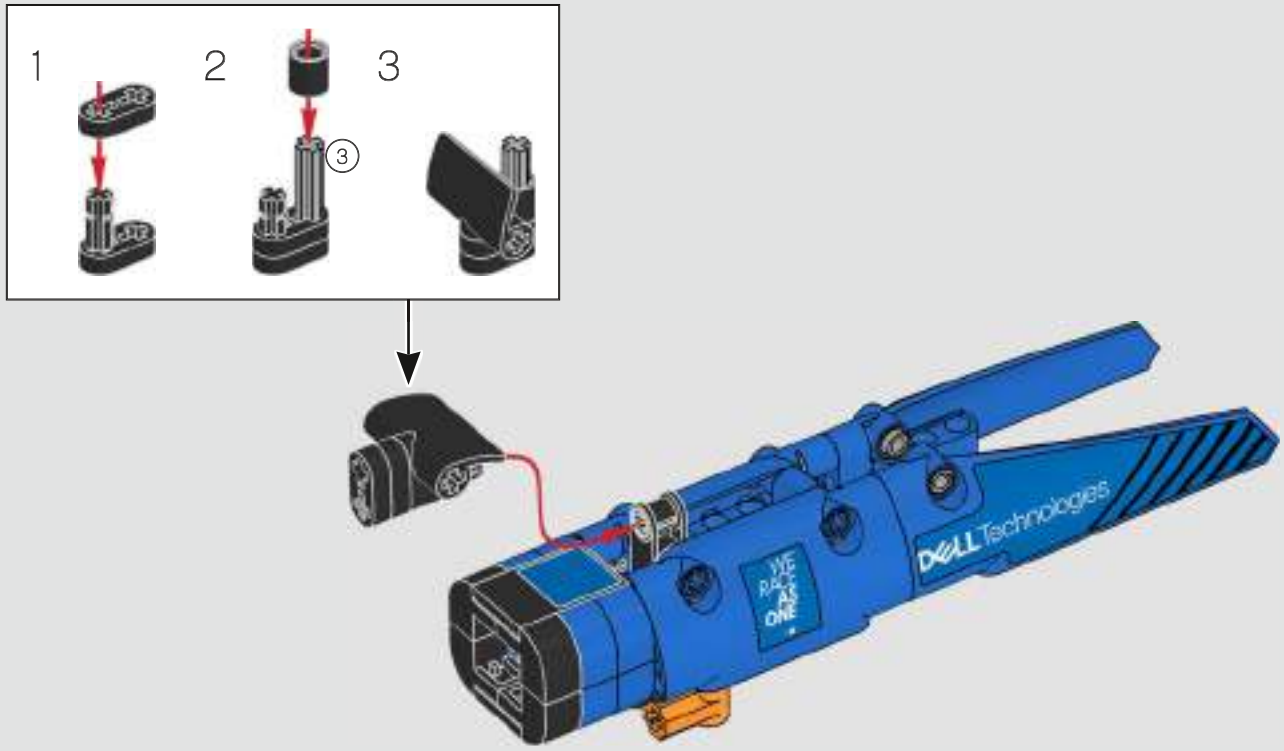

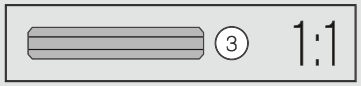

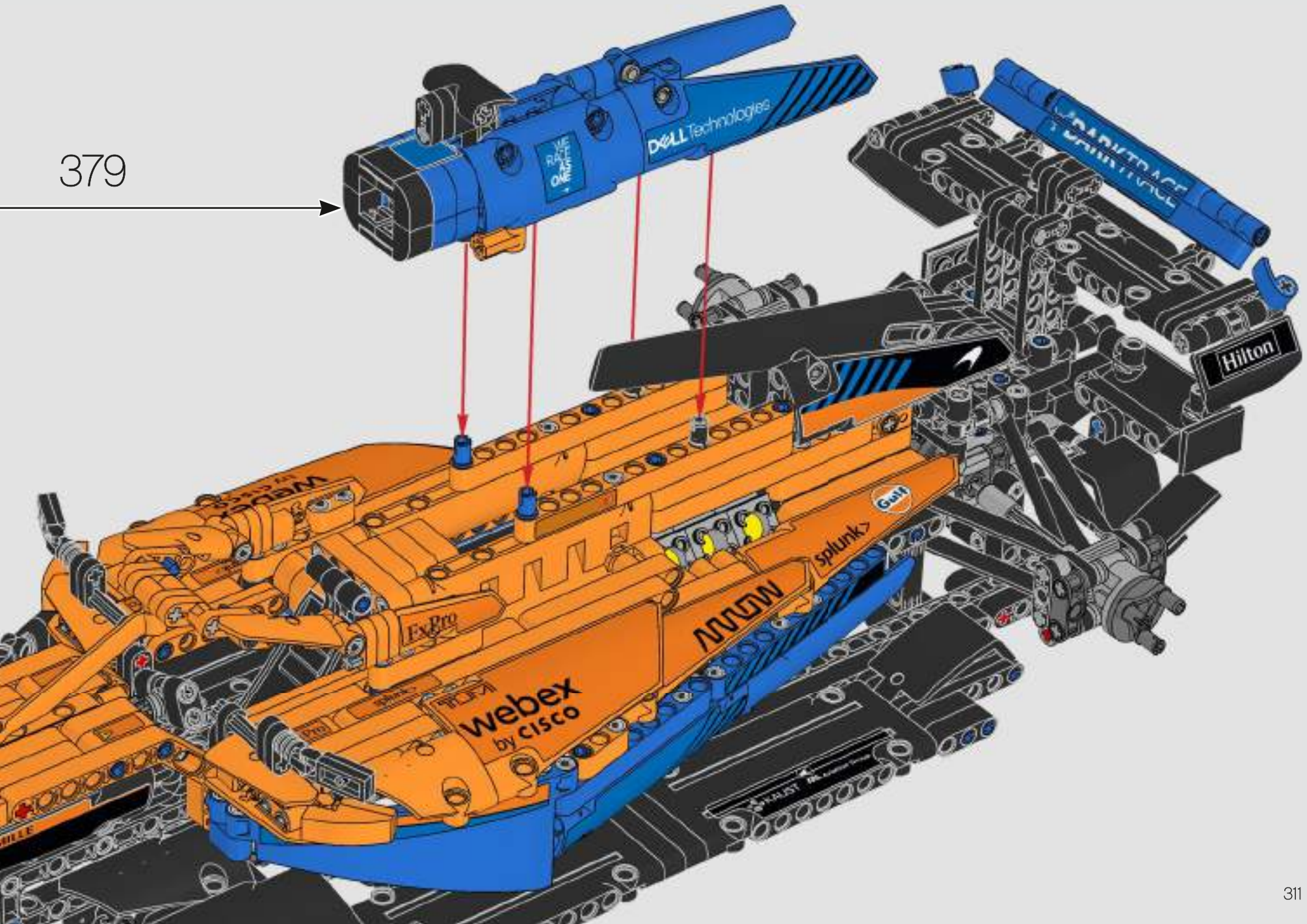
379
DELL Technologies
WE RACE AS ONE
Hilton
Gulf
splunk>
webex by cisco
ExPro

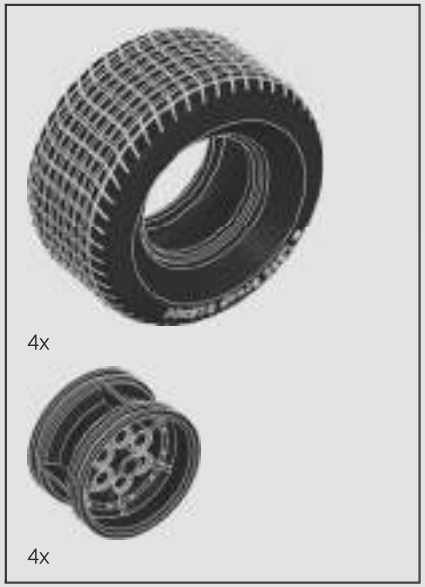

380

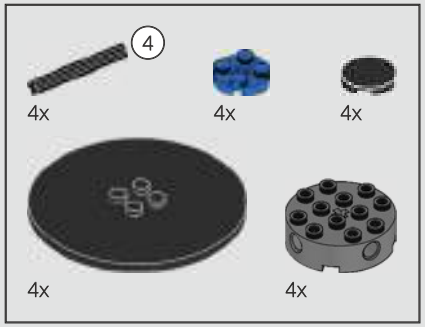

381

1

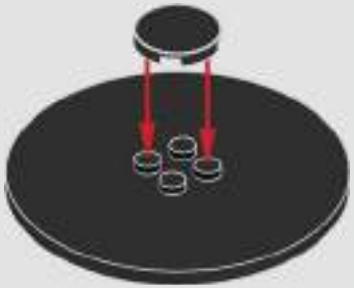

2

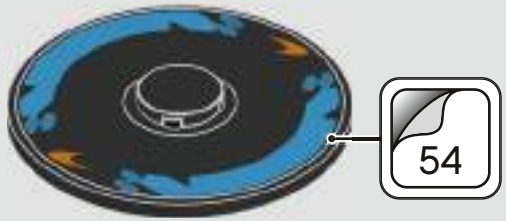

3

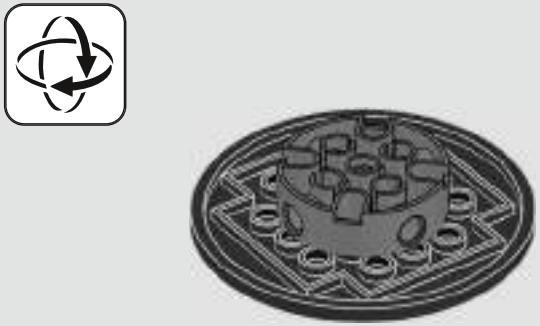

4

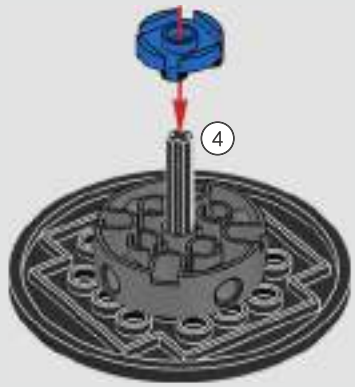

4x

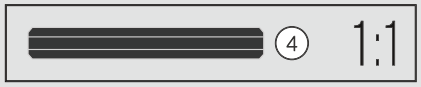

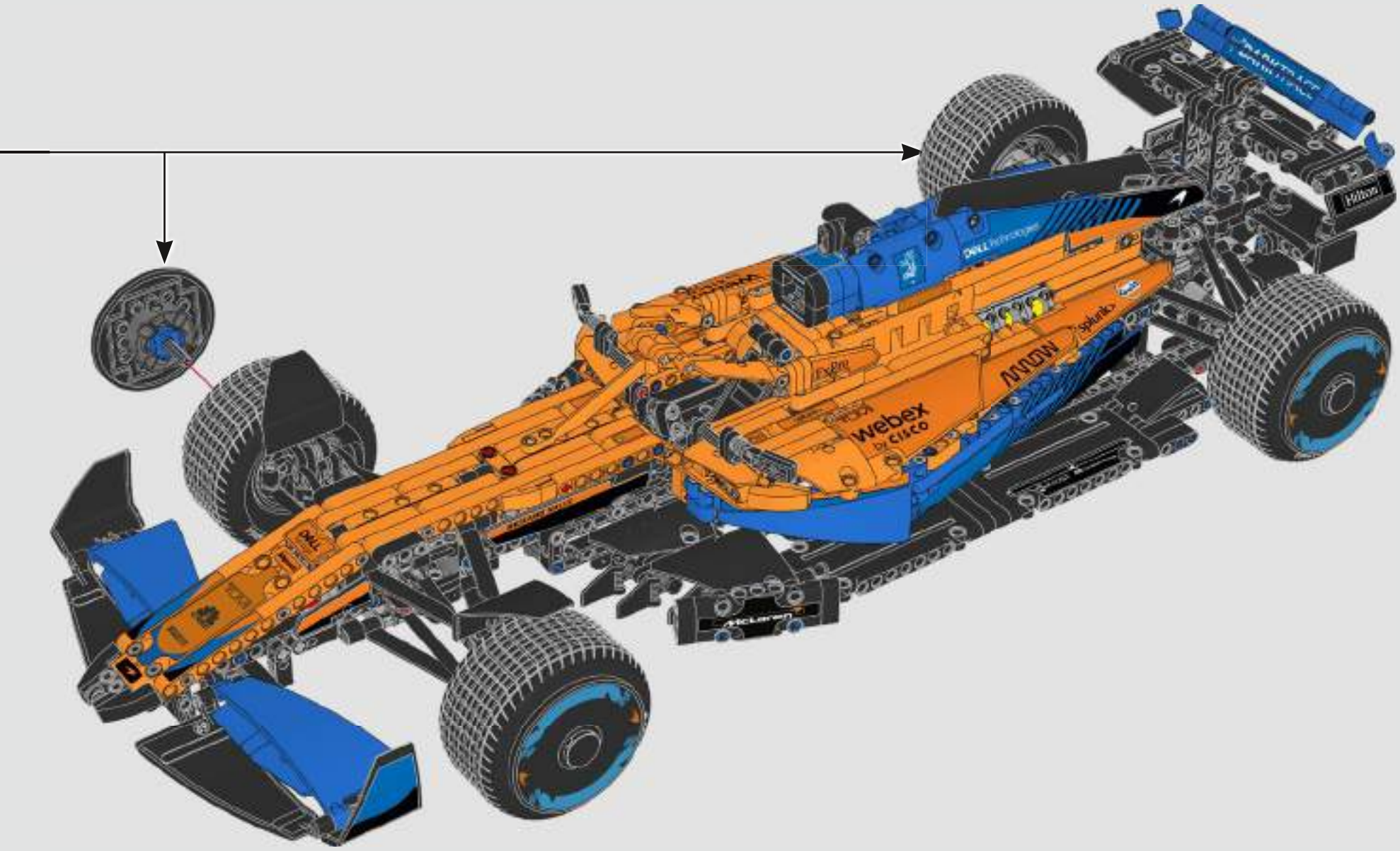
Webex
by cisco
splunk>
Hilton

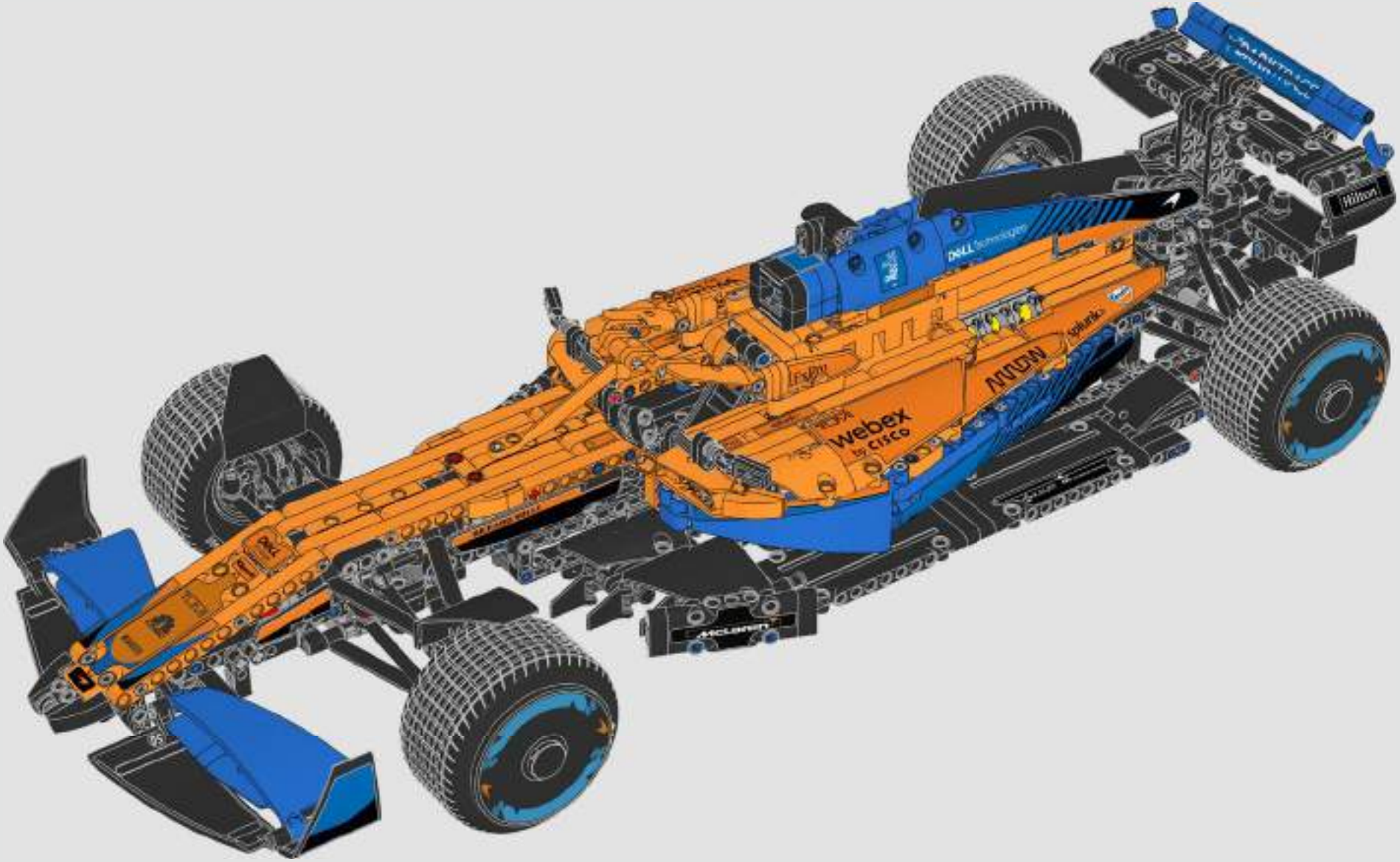
webex
by cisco
Hilton

FEEDBACK AND WIN

FEEDBACK
AND **WIN**

Your feedback will help shape the future development of this product series.

Please visit:

FEEDBACK
UND **GEWINNEN**

Dein Feedback trägt zur Weiterentwicklung dieser Produktreihe bei.

Geh auf:

COMMENTEZ
ET **GAGNEZ**

Vos commentaires nous aideront à concevoir les futurs produits de cette gamme.

Rendez-vous sur :

COMENTA
Y **GANA**

Tu opinión nos ayudará a dar forma al desarrollo de esta serie de productos en el futuro.

Visita:

反馈有奖

您的反馈将有助于我们在今后改进本系列产品。

请访问：

LEGO.com/productfeedback

By completing, you will automatically enter a drawing to win a LEGO® set.

Terms & Conditions apply.

Durch Ausfüllen nimmst du automatisch an der Verlosung eines LEGO® Preises teil.

Es gelten die Teilnahmebedingungen.

En envoyant vos commentaires, vous serez automatiquement inscrit(e) à un tirage au sort qui vous permettra de remporter un prix LEGO®.

Offre soumise à conditions.

Al contestar, participarás automáticamente en el sorteo y podrás ganar un set LEGO®.

Sujeto a Términos y Condiciones.

完成我们的反馈调查，即可自动进入抽奖环节，赢取乐高®套装。

适用《条款和条件》。

LEGO and the LEGO logo are trademarks of the LEGO Group. ©2022 The LEGO Group.
Manufactured under license from McLaren Racing Limited. McLaren is a trademark of McLaren Racing Limited.

4x
6357680

7x
6210272

4x
6265135

9
2x
6001831

3x
4565452

3x
6013938

2x
6355727

1x
6346517

2x
6378120

2x
6323573

6x
6360104

13x
4142865

17x
6209519

2x
6347789

4
5x
6129995

1x
6352661

4x
6385238

3x
6261383

1x
6352643

4x
403223

43x
4206482

3x
6057802

8x
4189123

119x
6299413

6
2x
6330920

2x
6331025

8x
6282145

5
2x
6330921

2x
6391882

9
3x
6115617

11
2x
6390388

2x
6390387

51
2x
6390394

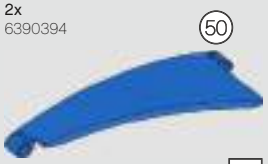
50
2x
6390392

15
1x
6057799

6x
4112203

2x
4119474

7
3x
6130009

2x
614126

25x
6121485

12x
6282140

1x
4177431

5x
6210270

2x
6265699

1x
6319983

2x
4143187

38x
6338428

3x
6261371

1x
6316923

15x
6284699

268x
6279875

13x
4109810

4x
6070695

6x
6253260

6x
6099801

1x
6265091

2x
4177444

5x
4512363

2x
6280394

8x
6331716

4x
6383142

1x
6178922

4x
6192309

2x
306926

8x
6173119

1x
446026

2x
6271346

6x
6363033

2x
6390386

2x
6313520

2x
6093525

24x
6331723

2x
6262897

6x
6271810

14x
6273708

1x
6315899

14x
6089119

2x
6267045

13x
6321745

1x
6276951

7x
4552347

8x
4142822

8x
6271869

3x
6362991

2x
4251161

6
2x
4558731

2x
6352693

1x
6331026

4x
6327548

4
1x
4541325

5
2x
4558774

4x
6162892

3
1x
4541924

4
10x
370526

10x
6271825

12x
6327028

71
3x
6362555

5
8x
4142135

6x
4142823

4x
6390379

2x
6256116

2x
6271358

8x
6163980

14
1x
4558740

13
1x
4558775

6
2x
370626

4x
6268012

1x
6327430

70
3x
6362554

2x
6318582

7
5x
4495935

4x
6276858

16x
6389430

2x
6150082

4x
6331935

6x
6244698

9
4x
4645732

2x
6271152

4x
4205860

11
2x
6029578

12
1x
370826

1x
6080356

4x
6199832

1x
6208345

51
1x
6390393

13
4x
4522933

4x
6027566

4x
4566243

50
1x
6390391

15
8x
4542573

1x
6305550

2x
6377025

2x
6295161

1x
6254248

1x
6390380

1x
6390390

4x
4558595

4x
6352662

10x
6390384

6x
6261377

4x
6340604

4x
6391881

10x
6265128

2x
6390383

4x
4177932

4x
6055069

4x
6112356

2x
6266212

2x
6391883

2x
6390385

2x
4542142

2x
6390382

11x
6102618

2x
4251969

6
2x
6358253

2
1x
6370444

1
1x
6370445

1x
6358255

5
2x
6358254

5
18x
6143014

4x
6390381

18
1x
6135080

17
1x
6135079

7
10x
6339024

1x
6390389

2x
6271162

2x
6390599

11
2x
6135085

2x
4580022

1x
6339023

13
6x
4629802

15
4x
6358259

3
2x
6135494

4x
6265690

16x
6271165

8x
6275844

26x
4211483

6x
4211375

3x
6261375

2x
6296859

8x
4211807

8x
4512360

6x
6000018

2x
6169984

3
29x
4211815

3x
6276969

2x
6346487

1x
6282158

7x
6331441

6x
6273212

4x
6370947

6x
4234251

4x
6331574

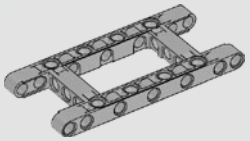
1x
4540797

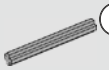
5
19x
4211639

2x
6170293

2x
6012451

6x
6265669

4x
6135014

2x
4610374

1x
6167281

15x
6276984

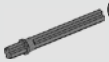
5,5
2x
4508553

2x
6271876

6x
4210751

4x
4610378

4
24x
6083620

4x
4211097

1x
4525184

Customer Service
Kundenservice
Service Consommateurs
Servicio Al Consumidor
LEGO.com/service or dial
: 00800 5346 5555
: 1-800-422-5346

McLaren
FORMULA 1 TEAM