ARTE LAMP

# ASSEMBLY INSTRUCTION A8381AL-1
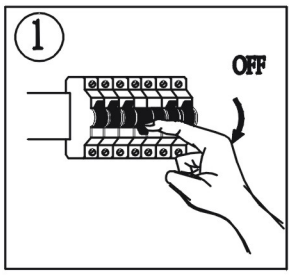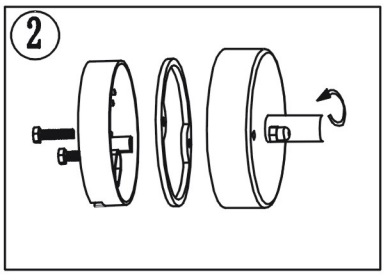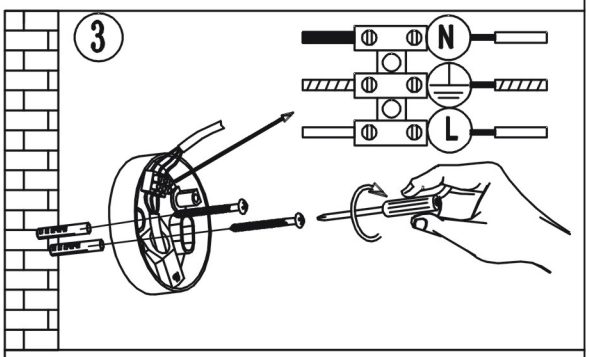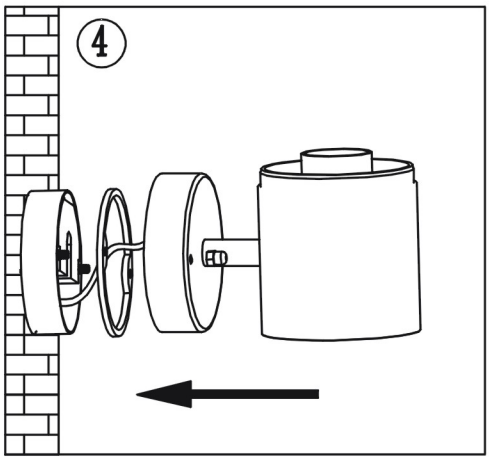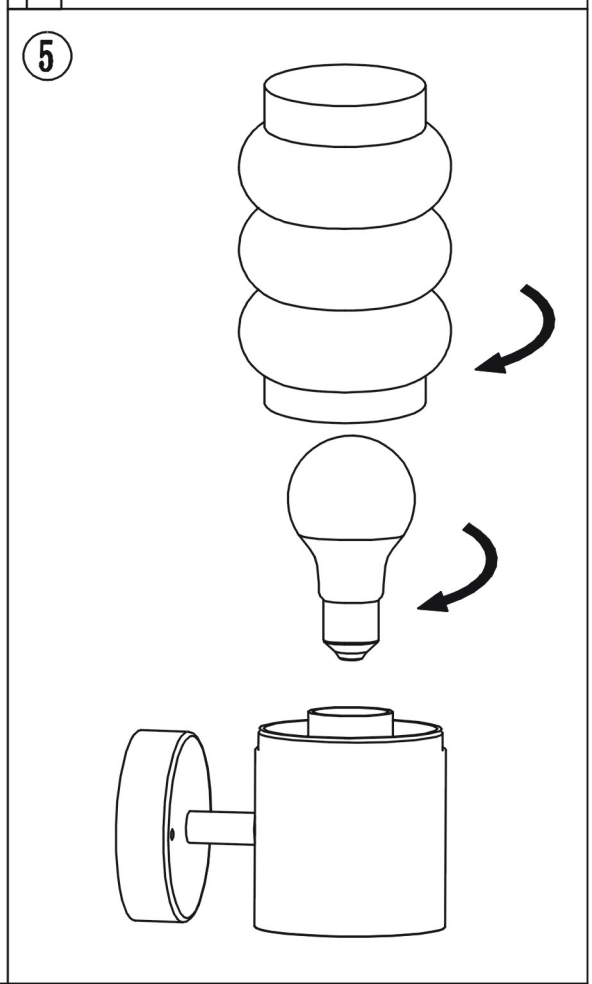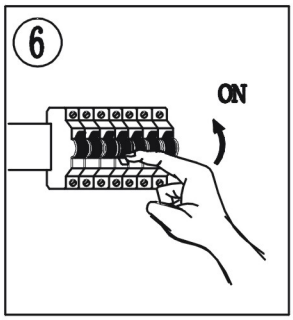
# ИНСТРУКЦИЯ