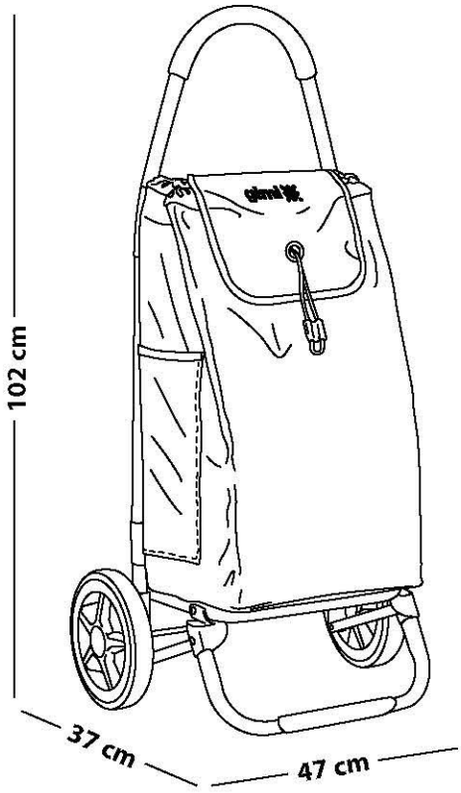
102 cm
37 cm
47 cm

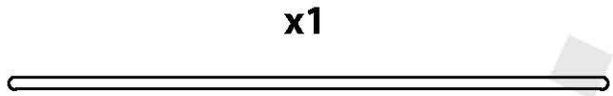
x1

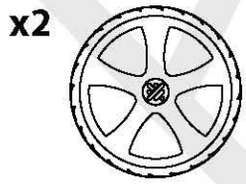
x2

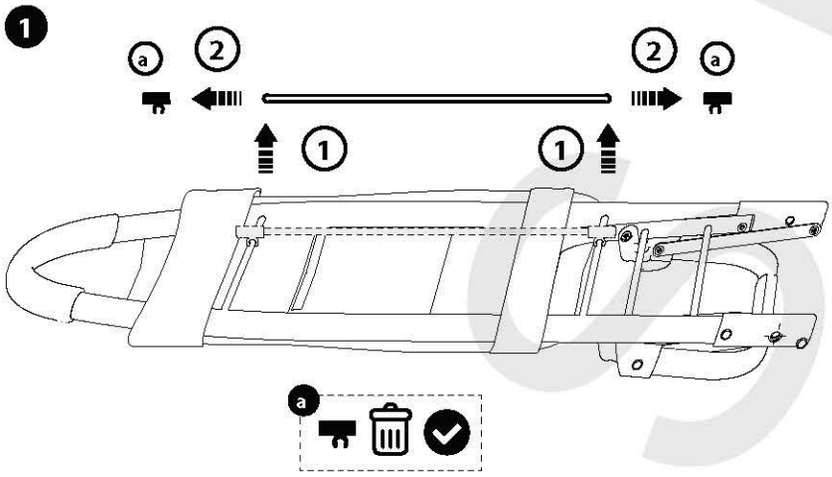
1
a
2
2
a
1
1
a

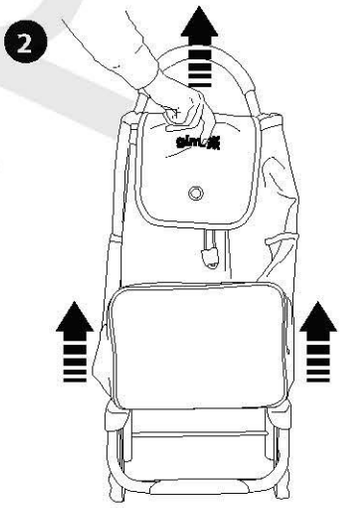
2

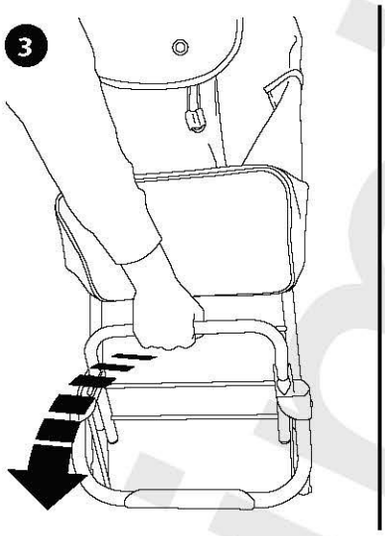
3

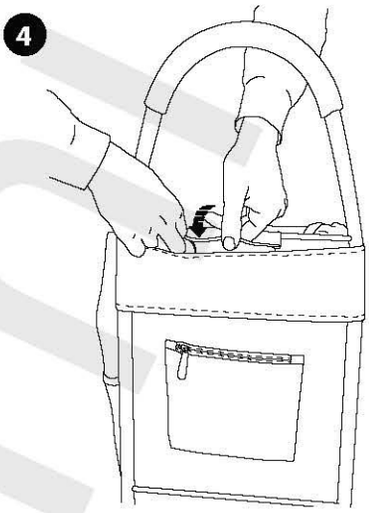
4

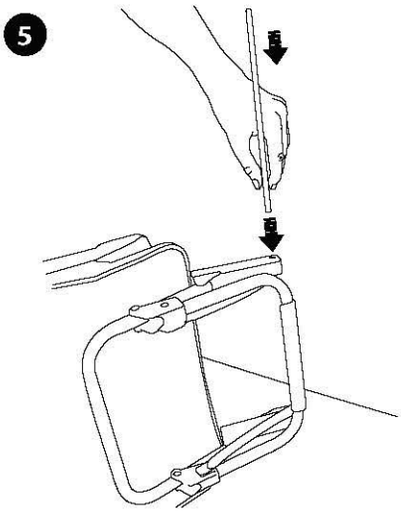
5

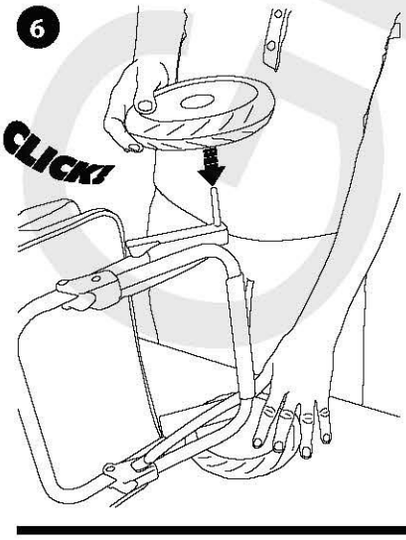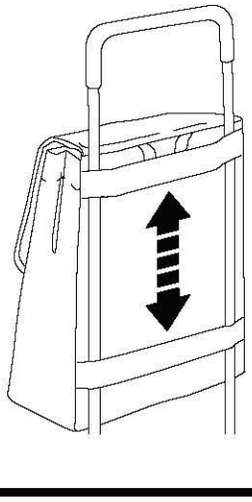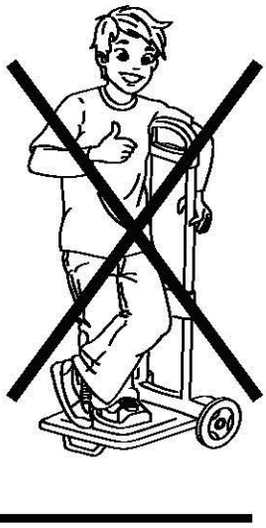
6
CLICK!