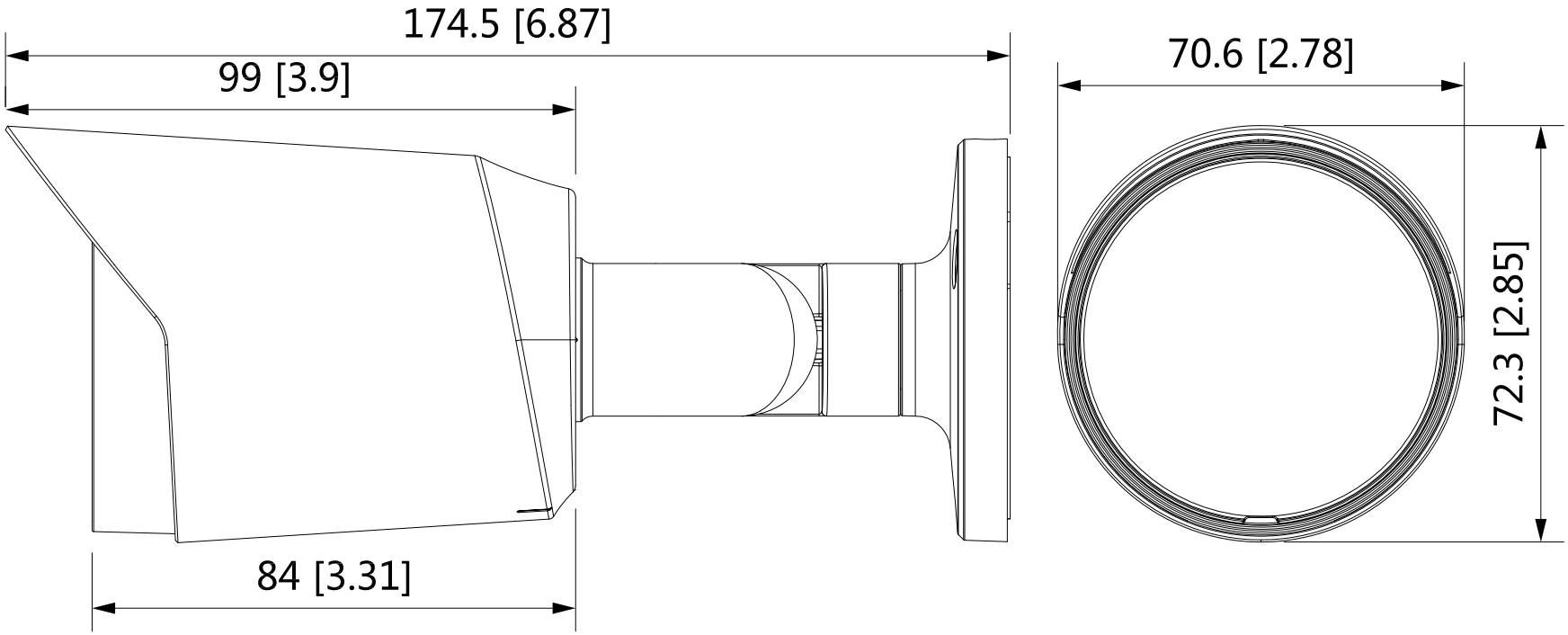
174.5 [6.87]
99 [3.9]
84 [3.31]
70.6 [2.78]
72.3 [2.85]

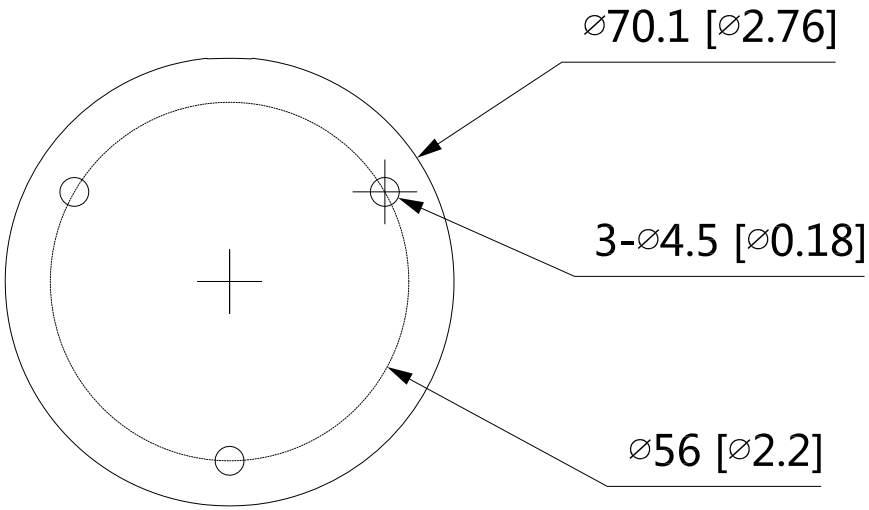
⌀70.1 [⌀2.76]
3-⌀4.5 [⌀0.18]
⌀56 [⌀2.2]