A	1 PC
B	1 PC
C	2 PCS
D	1 PC
E	2 PCS
F	3 PCS
G	34 PCS
H	4 PCS

1	M8 x 30mm	8 PCS
2		34 PCS
3		17 PCS
4	M3.5 x 16mm	8 PCS
5	M5	1 PC
6	M4 x 20mm	2 PCS

1

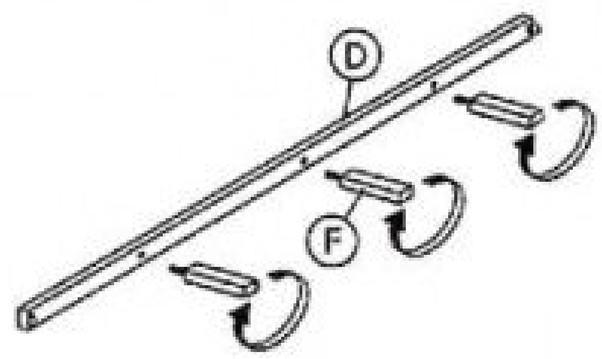

2

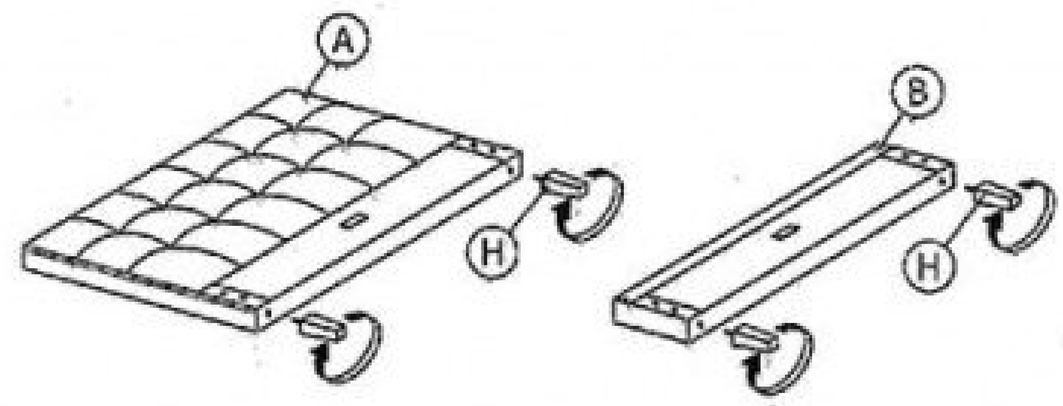

3

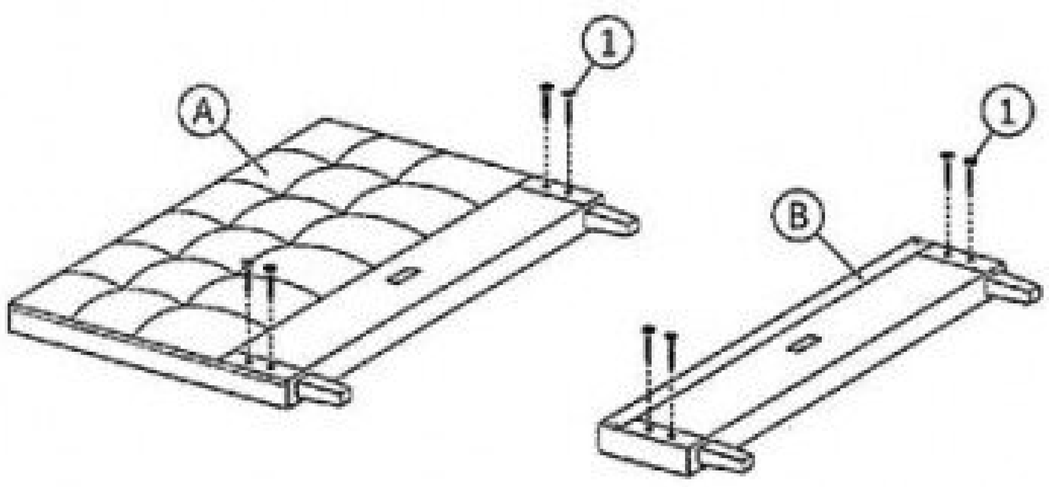

4

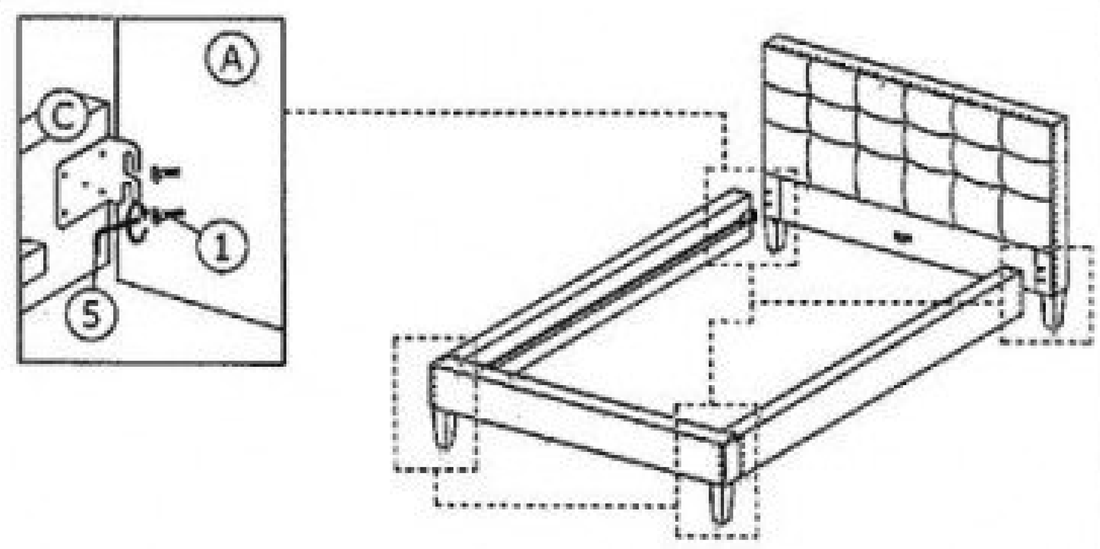

5

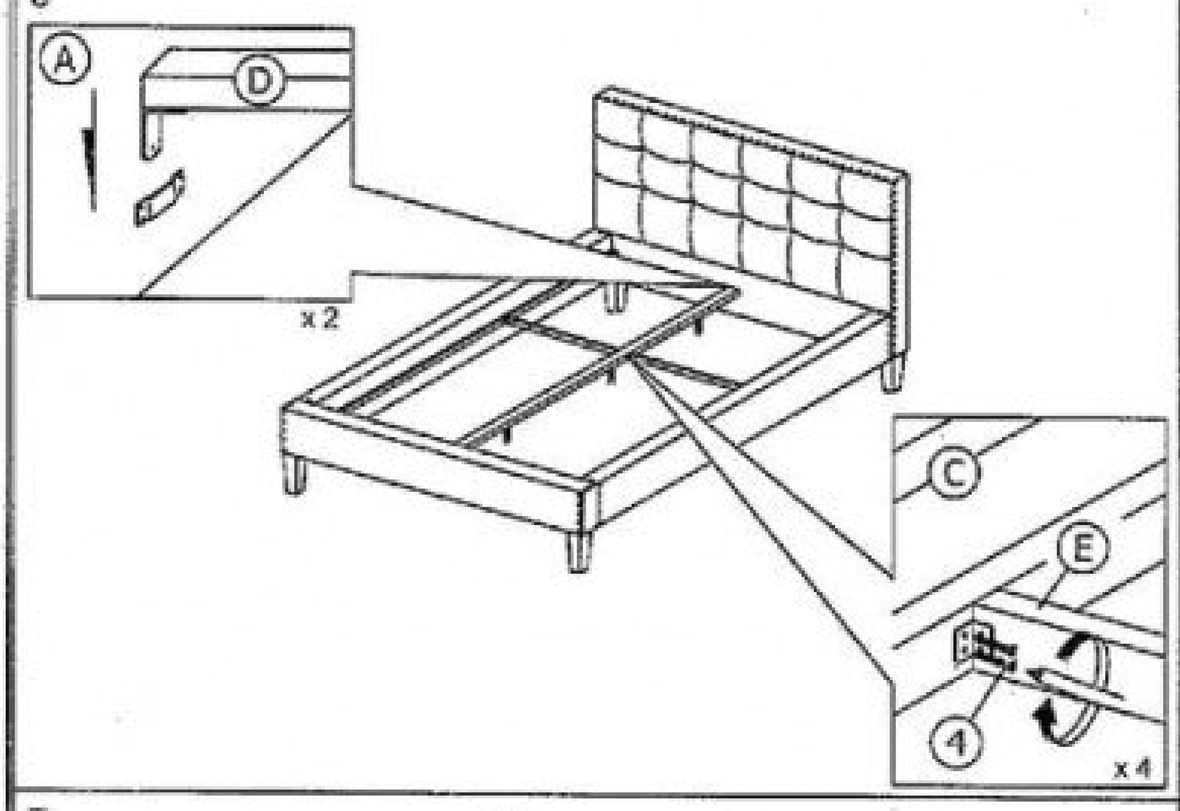

6

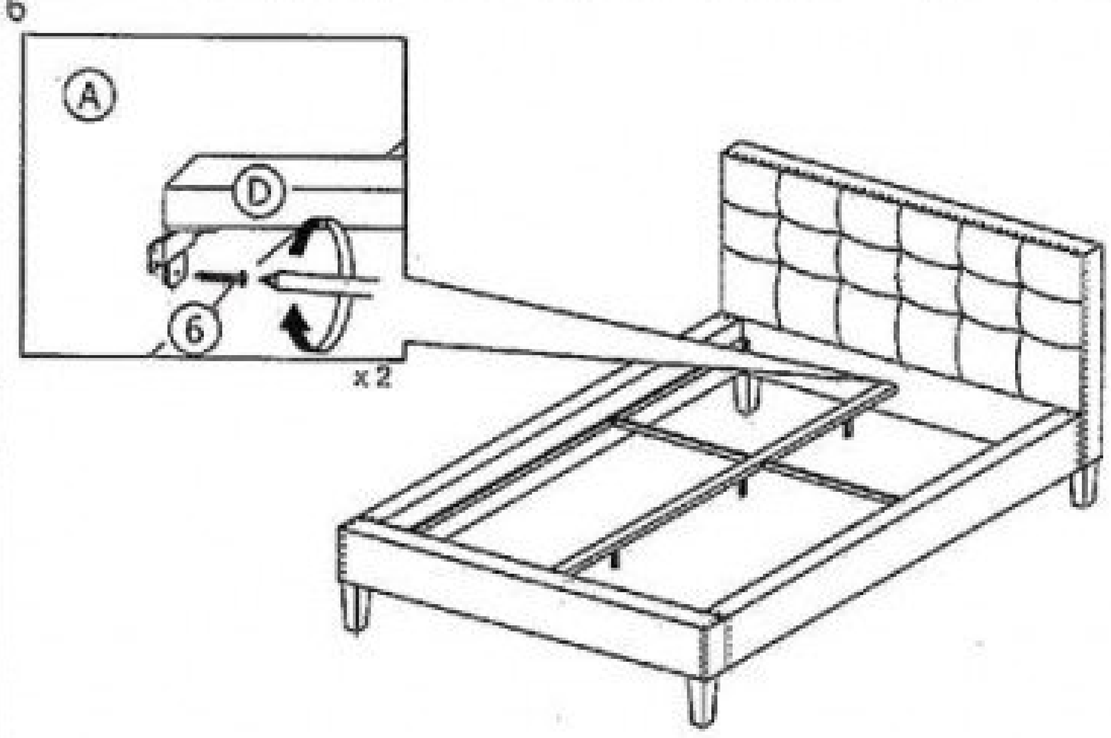

7

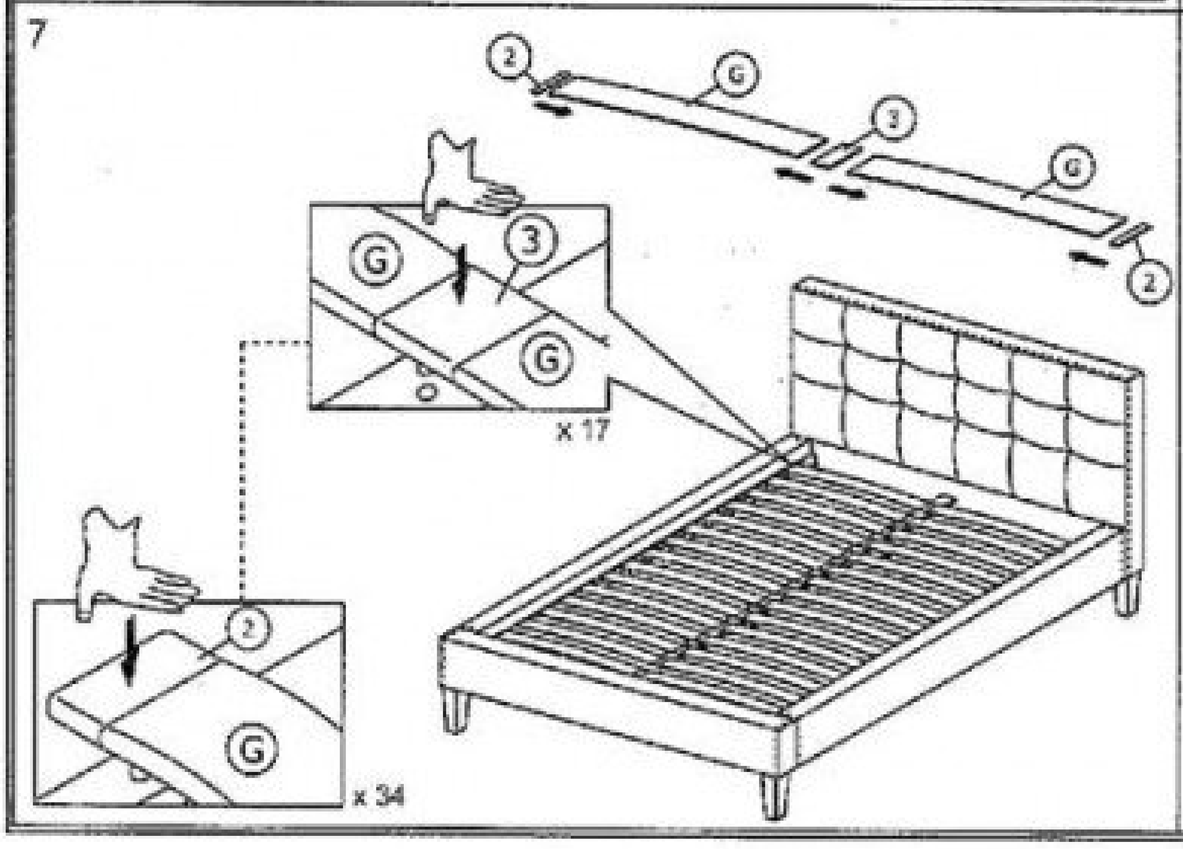

8