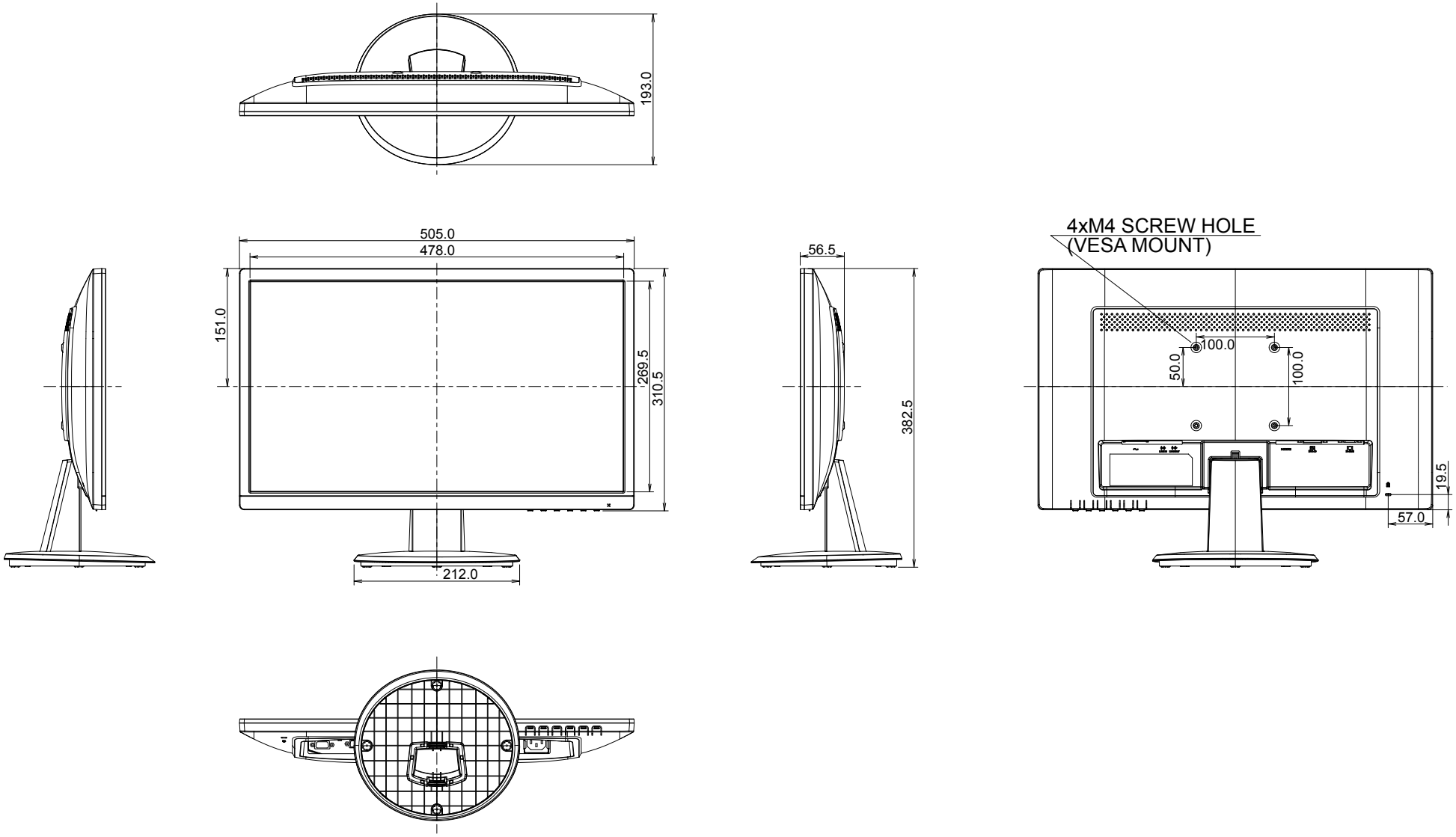
193.0
505.0
478.0
151.0
269.5
310.5
212.0
56.5
382.5
4xM4 SCREW HOLE
(VESA MOUNT)
100.0
50.0
100.0
19.5
57.0